BUSTER+PUNCH
LONDON

EUROPEAN ELECTRICITY

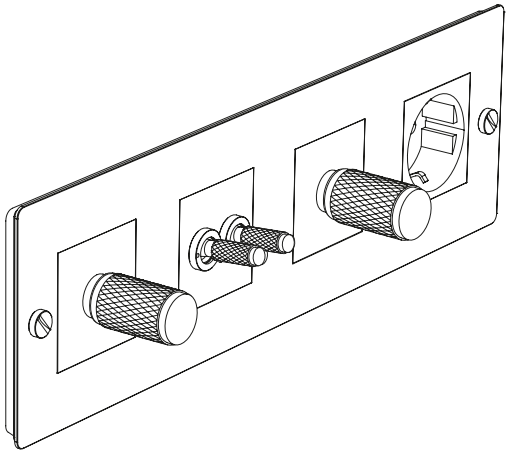

BUSTERANDPUNCH.COM
L0216

ENGLISH / CONTENTS

ENGLISH / RETRACTIVE MULTI-LOCATION DIMMER MODULE	3
ENGLISH / 100W DIMMER MODULE	7
ENGLISH / TOGGLE SWITCH	11
ENGLISH / RETRACTIVE SWITCH	16
ENGLISH / 1-10V DIMMER SWITCH	20
ENGLISH / 120W LED / 2-WAY DIMMER MODULE	22
ENGLISH / 2-WAY DUMMY DIMMER MODULE	25
ENGLISH / INTERMEDIATE DUMMY DIMMER / 3-WAY	26
ENGLISH / SOCKET MODULES	28
ENGLISH / MODULAR ASSEMBLY	30

[end. **ORDINARY.**]

BUSTER + PUNCH

LONDON

EU ELECTRICITY

Retractive Multi-Location
Dimmer Module

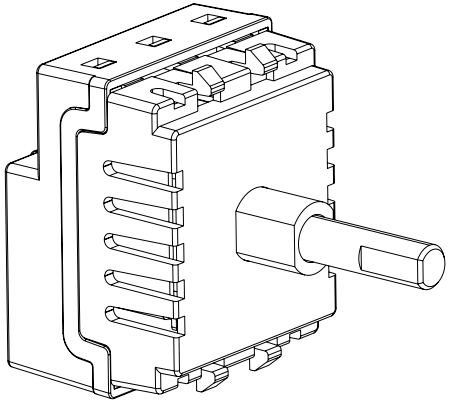

IMPORTANT!

This product must be installed by a qualified professional. Turn off the power at the breaker prior to installing this product.
You shall use BP-DRT250 with an appropriate 6A - 16A circuit breaker.
This dimmer is not compatible with intermediate switches.

WARNING: ELECTRIC SHOCK HAZARD

Hazardous voltage may be present at the Dimmer's output despite setting the Dimmer to zero brightness level.

BUSTERANDPUNCH.COM
L0213

CE

ELECTRICAL SPECIFICATIONS

PARAMETER	Value
Supply voltage & Frequency	240V ~ 50Hz
Rating	3-250W: When used with dimmable LED lamps. 10-350W: When used with incandescent lamps, high voltage halogen lamps and Low Voltage Incandescent Ballasts
Dimming Technology R.C.L	Auto Detect Trailing / Leading edge dimming. Leading / Trailing edge dimming mode can be manually set.
Compatible loads for **TE MODE**	**LED** Dimmable LED lighting with compatible Electronic Transformers
	LV Halogen Lighting with electronic transformers
Compatible loads for **LE MODE**	Incandescent lighting, MV Halogen lamps
	LV Halogen lamps with Iron-core transformers
Operating Temperature	0° - 55°C
Operating Humidity	10 - 90% R.H.

THERMAL OVERLOAD PROTECTION

This Dimmer has a built-in thermal protected circuit. It will automatically switch off if the temperature rises above 120°C and reset when the dimmer cools down to 70°C. If the issue persists, please reduce the load on the dimmer.

SHORT CIRCUIT PROTECTION

Once activated, the dimmer will stop and reset after 5 seconds. If there is still a fault on the circuit, the dimmer will suspend operation until power is disconnected and Switch ON again. In this case, please contact a qualified professional.

NOTE :

Only **LEADING EDGE MODE (LE)** is compatible when connecting with IRON-CORE transformers, DO NOT use in **TRAILING EDGE (TE)** mode.
Multiple compatible loads can be used if the total lamp wattage does not exceed the maximum load rating of the dimmer.
Some lamps may exhibit unexpected performance characteristics when cold. Dimming performance should improve after the lamp warms up. If the lamp appears unstable, try changing TE or LE mode.

RECYCLING ELECTRICAL PRODUCTS

Buster + Punch encourages all of its customers to make note of this symbol and avoid putting any waste electrical goods in your domestic waste bin or container. Please ensure you take your waste electrical goods to a suitable facility for disposal.

MINIMUM BRIGHTNESS LEVEL SETTING

How to set the minimum brightness level:

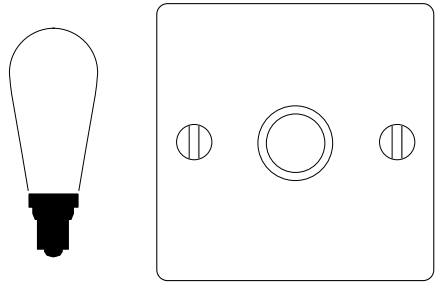

When the lamp is switched **ON**, press and hold "**PUSH KNOB**" for 3-5 sec until the lamps appear at half their brightness level.

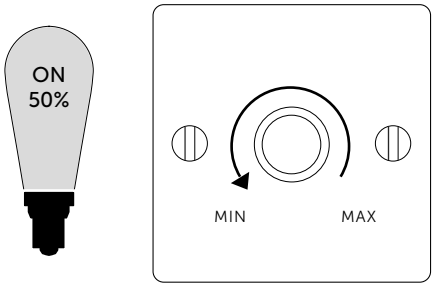

Rotate the knob to program the minimum brightness levels.

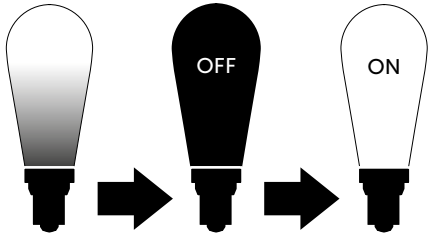

Each step must be performed within 15 seconds; if not, it will automatically exit the program without saving.

MODE SETTING

How to manually change the **MODE SETTING** (Factory default TE auto mode):

Remove the dimmer knob to view the LED indicator.

The LED indicator show below:

GREEN Light – TE auto mode
GREEN + RED Light - TE mode
RED Light - LE mode

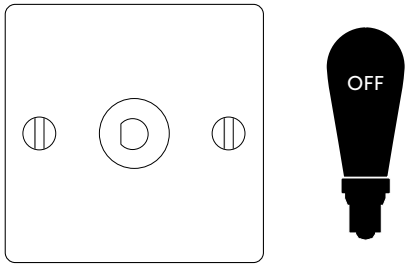

Pull to remove the dimmer knob to view the **LED** indicator.

Turn OFF the lamp

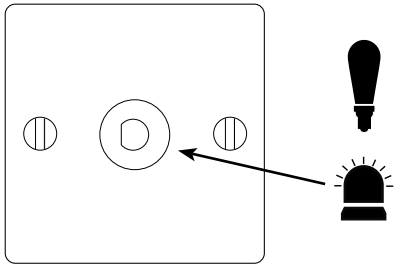

Press and hold "**Push Knob**" for around 3-5 sec until the **LED** indicator light starts to flash.

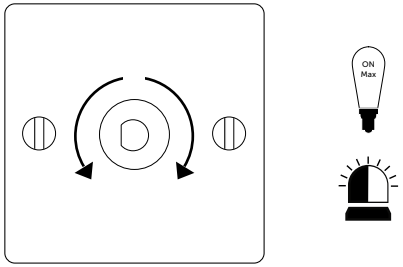

Turn the knob left or right to select desire mode

Push once to save and exit.

1

BEFORE COMMENCING WORK, ISOLATE THE MAINS POWER SUPPLY AND REMOVE THE FUSE BOX OR SWITCH OFF THE CIRCUIT BREAKER IN CONSUMER UNIT.

2a

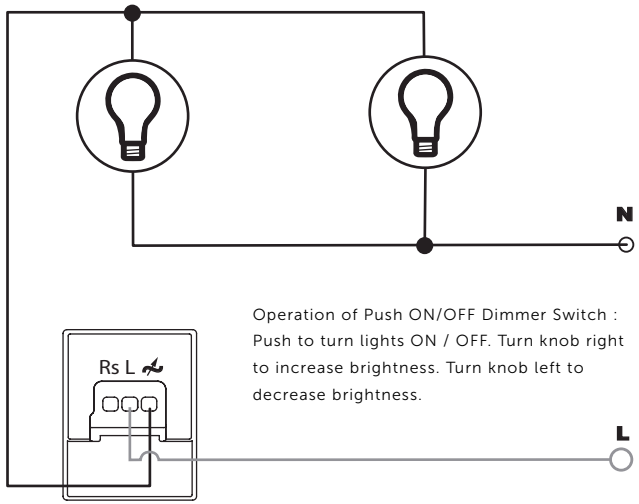

Operation of Push ON/OFF Dimmer Switch : Push to turn lights ON / OFF. Turn knob right to increase brightness. Turn knob left to decrease brightness.

NOTE:

The Dimmer must always be connected to the LINE side of the load. Two or more dimmers MUST NOT be connected in parallel or series to control the same load from two different locations.

2b

MULTIPLE LOCATION DIMMING

How to dim from multiple locations using Buster + Punch Retractive (push to make) Switch:

Press retractive toggles to switch lights ON/OFF. Press and hold toggle to increase brightness, release and press and hold to decrease brightness.

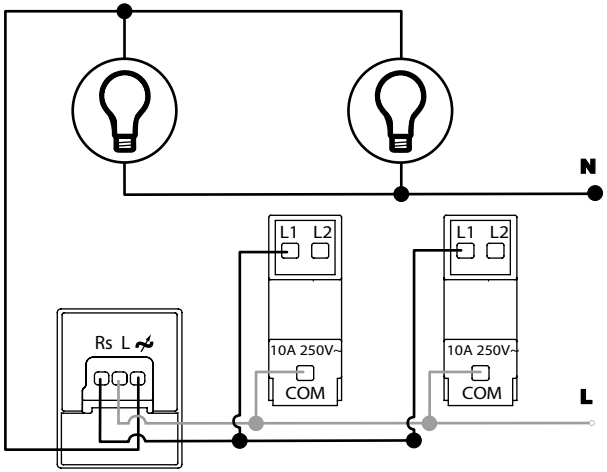

3

Disassemble plate

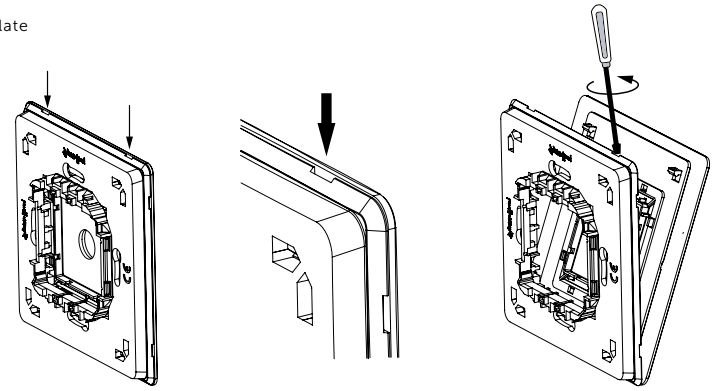

4

Snap-in the dimmer to the plate before screwing the container to the wall

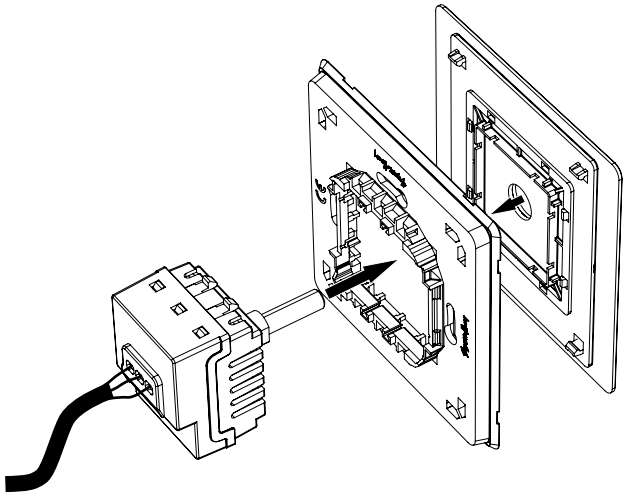

5

By hand, screw nut **B** in place (orientate as shown).
Align flat on Part **A** to corresponding flat in part **C**.

Push the dimmer knob in place by hand.

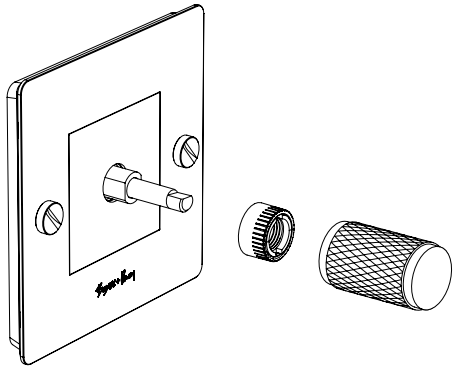

6

Turn power back on.

[end. **ORDINARY.**]

BUSTER+PUNCH
LONDON

EU ELECTRICITY

100w Trailing Edge Dimmer Module
(Conventional Dimmer)

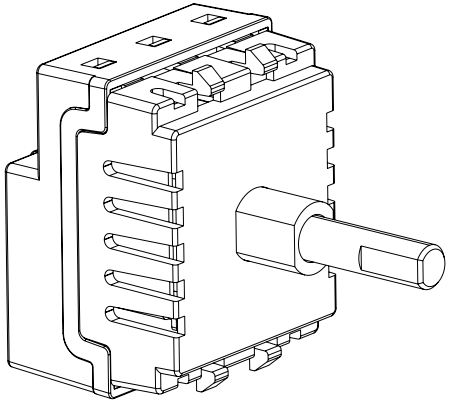

IMPORTANT!
This product must be installed by a qualified professional. Turn off the power at the breaker prior to installing this product.
You must use BP-LVR100EU with an appropriate 6A - 16A circuit breaker.

WARNING: ELECTRIC SHOCK HAZARD
Hazardous voltage may be present at the Dimmer's output despite setting the Dimmer to zero brightness level.

BUSTERANDPUNCH.COM
L0213

CE

ELECTRICAL SPECIFICATIONS

PARAMETER	Value	
Supply voltage & Frequency	240V ~ 50Hz	
Rating	2-100W: When used with dimmable LED lamps. 10-250W: When used with incandescent lamps, high voltage halogen lamps and Low Voltage Incandescent Ballasts	
Dimming Technology R.C.L	Trailing edge dimming	
Compatible loads	LED	Dimmable LED lighting with compatible Electronic Transformers
		LV Halogen Lighting with electronic transformers
		Incandescent lighting, MV Halogen lamps
Operating Temperature	0° - 55°C	
Operating Humidity	10 - 90% R.H.	

THERMAL OVERLOAD PROTECTION
This Dimmer has a built-in thermal protected circuit. It will automatically switch off if the temperature rises above 120°C and reset when the dimmer cools down to 70°C. If the issue persists, please reduce the load on the dimmer.

NOTE :
This Dimmer is **TRAILING-EDGE MODE** only.
Multiple compatible loads can be used if the total lamp wattage does not exceed the maximum load rating of the dimmer.
Some lamps may exhibit unexpected performance characteristics when cold. Dimming performance should improve after the Lamp warms up.

RECYCLING ELECTRICAL PRODUCTS

Buster + Punch encourages all of its customers to make note of this symbol and avoid putting any waste electrical goods in your domestic waste bin or container. Please ensure you take your waste electrical goods to a suitable facility for disposal.

1

BEFORE COMMENCING WORK, ISOLATE THE MAINS POWER SUPPLY AND REMOVE THE FUSE BOX OR SWITCH OFF THE CIRCUIT BREAKER IN CONSUMER UNIT.

2a ONE WAY OPERATION

Remove existing switch from wall.

Connect the dimmer in accordance with the appropriate wiring diagrams.

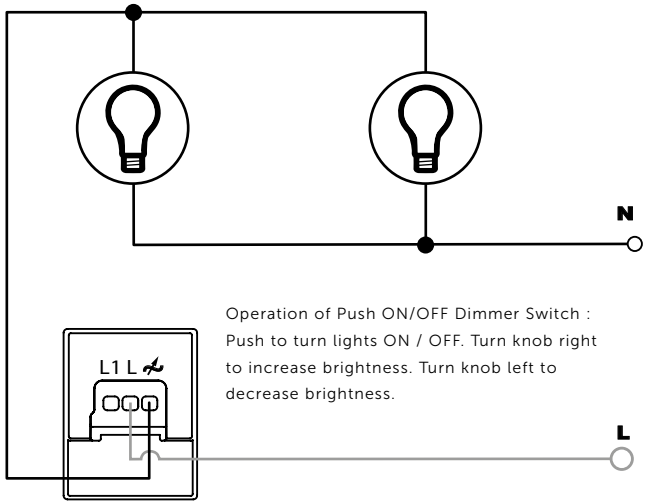

Operation of Push ON/OFF Dimmer Switch : Push to turn lights ON / OFF. Turn knob right to increase brightness. Turn knob left to decrease brightness.

NOTE:

The Dimmer must always be connected to the LINE side of the load. Two or more dimmers MUST NOT be connected in parallel or series to control the same load.

2b TWO WAY OPERATION

How to switch your dimmer on/off from multiple locations using the buster and punch 2-way Switch.

The Dimmer must always be connected to the LINE side of the load. only use one dimmer to control the same load per circuit

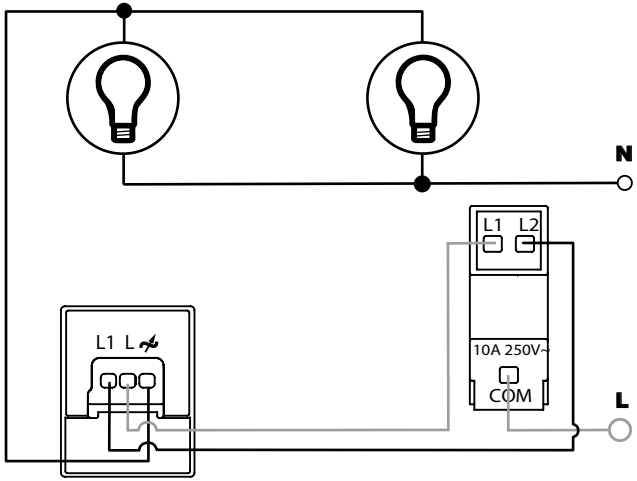

2c THREE WAY OPERATION

How to Switch lights from 3 / more locations using buster and punch Intermediate and 2 way switches.

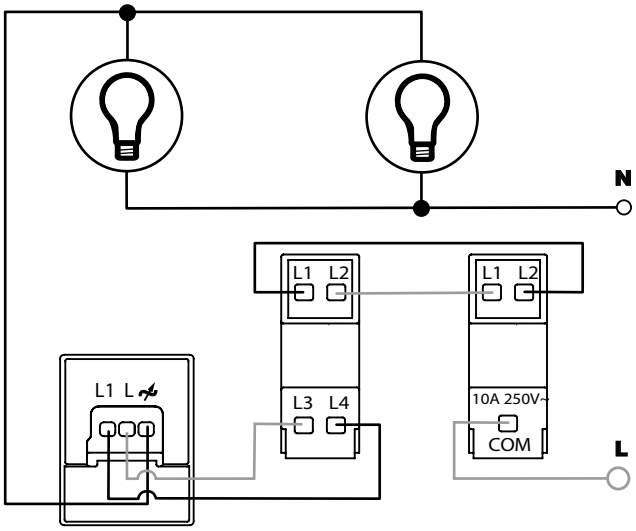

2c SET MINIMUM BRIGHTNESS LEVEL SETTING

Follow operating steps		Actions
1	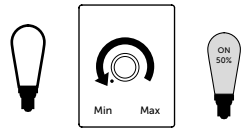	Switch ON Lamp Turn knob left to decrease brightness.
2	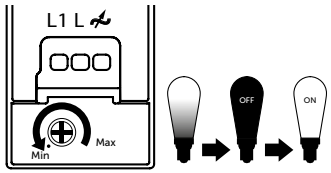	At the back of the dimmer Rotate the cross to program the minimum Brightness levels.

if already installed , remove front plate cover before setting the min dim level

3

Disassemble plate

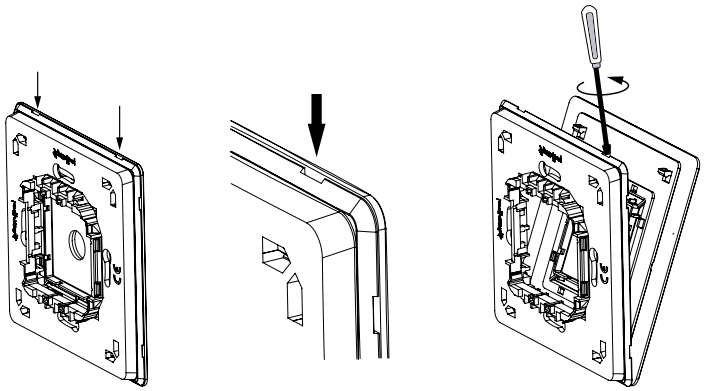

4

Snap-in the dimmer to the plate before screwing the container to the wall

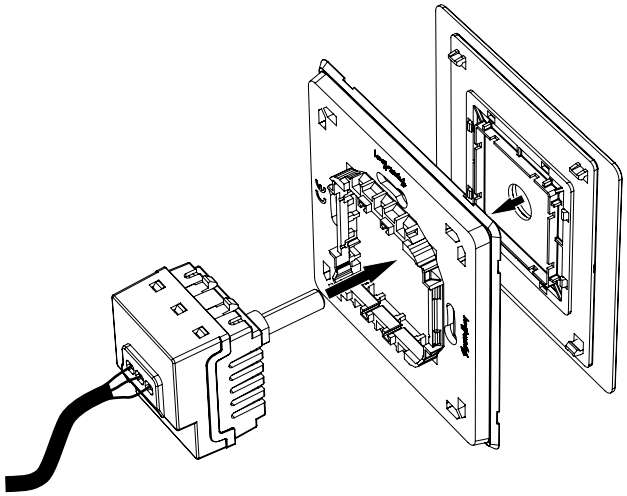

5

By hand, screw nut **B** in place (orientate as shown).
Align flat on Part **A** to corresponding flat in part **C**.

Push the dimmer knob in place by hand.

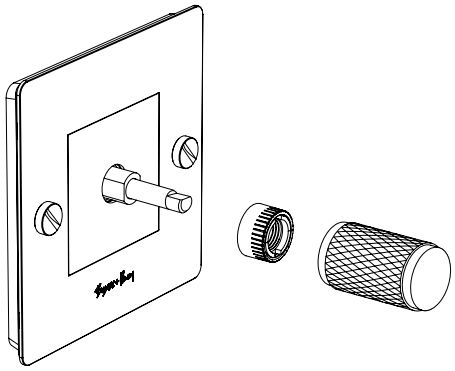

5

Turn power back on.

[end. **ORDINARY.**]

BUSTER + PUNCH

LONDON

EU ELECTRICITY

Toggle Switch

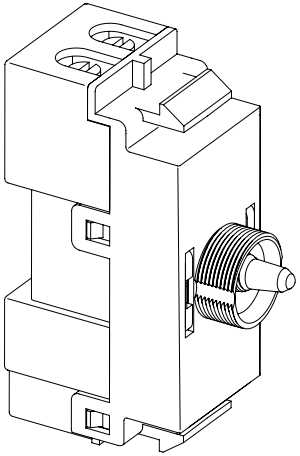

TECHNICAL SPECIFICATION

2 Way Switch / Intermediate Switch

Rated at 10AX 220 - 250VAC

IMPORTANT!

This product must be installed by a qualified professional. Turn off the power at the breaker prior to installing this product.

WARRANTY INFORMATION

The Warranty Period of Two (2) years from the date of the original purchase.

BUSTERANDPUNCH.COM

L0214

CE

RECYCLING ELECTRICAL PRODUCTS

Buster + Punch encourages all of its customers to make note of this symbol and avoid putting any waste electrical goods in your domestic waste bin or container. Please ensure you take your waste electrical goods to a suitable facility for disposal.

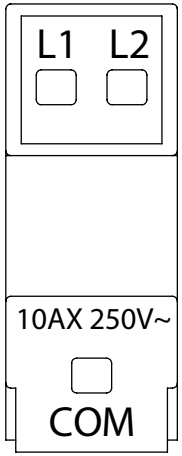

2-WAY SWITCH

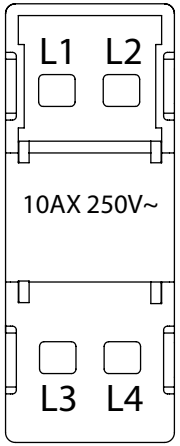

INTERMEDIATE SWITCH

1

BEFORE COMMENCING WORK, ISOLATE THE MAINS POWER SUPPLY AND REMOVE THE FUSE BOX OR SWITCH OFF THE CIRCUIT BREAKER IN CONSUMER UNIT.

2 ASSEMBLE TOGGLE ARM

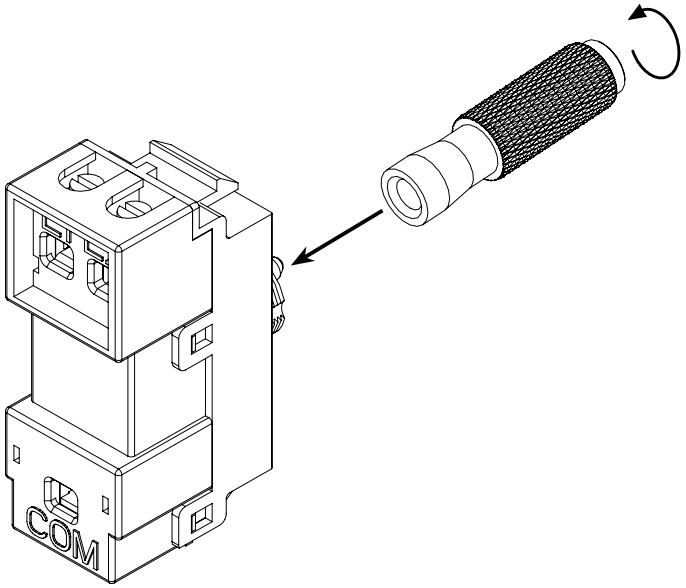

***NOTE:**
When tightening threaded parts be careful not to cross thread. We recommend pushing and rotating the part anticlockwise until you feel a click, then tighten clockwise finger tight.

3 FIT MODULE TO WALL PLATE

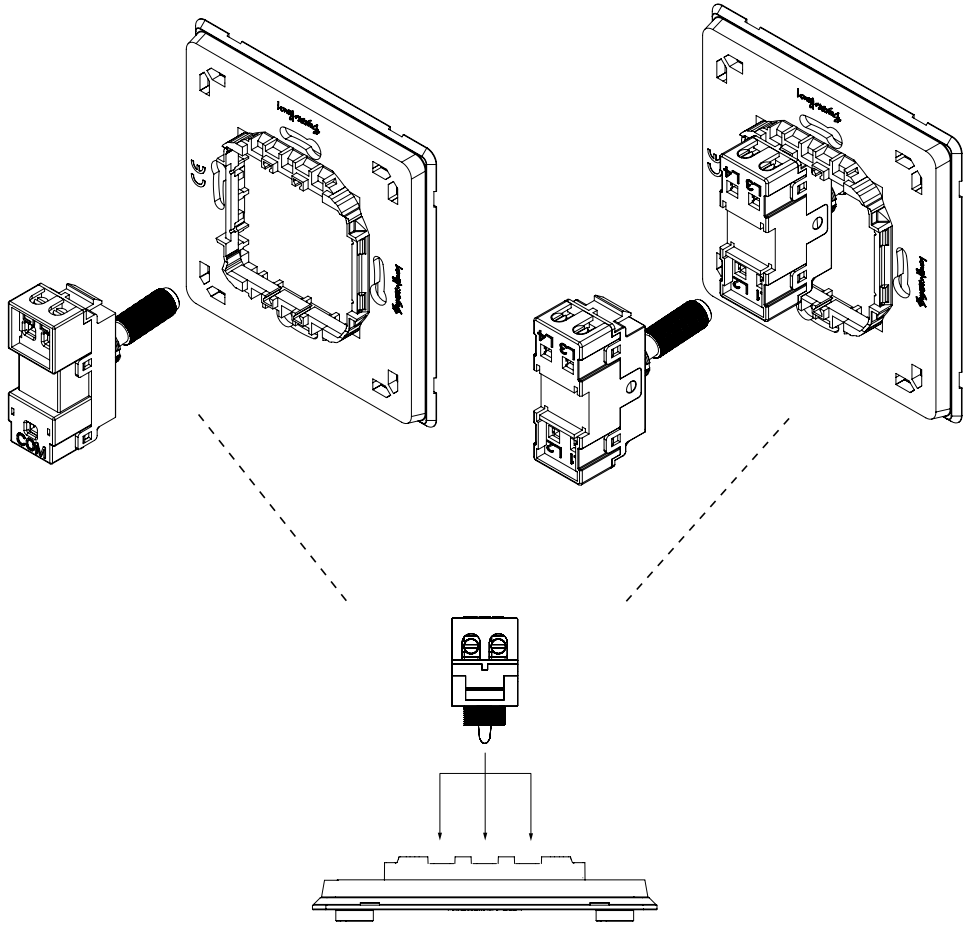

4a ONE WAY OPERATION

HOW TO SWITCH LIGHTS FROM 1 LOCATION USING A BUSTER & PUNCH 2-WAY SWITCH.

Connect the wires as shown in appropriate wiring diagrams.

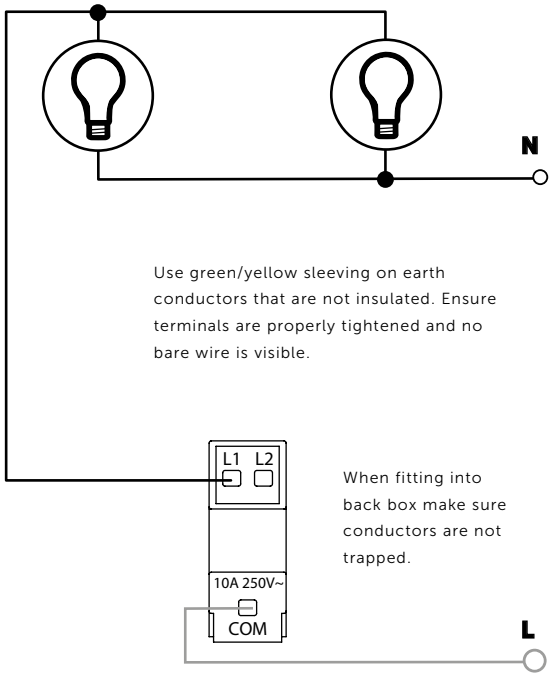

Use green/yellow sleeving on earth conductors that are not insulated. Ensure terminals are properly tightened and no bare wire is visible.

When fitting into back box make sure conductors are not trapped.

4b TWO WAY OPERATION

HOW TO SWITCH LIGHTS FROM 2 LOCATIONS USING A BUSTER & PUNCH 2-WAY SWITCH.

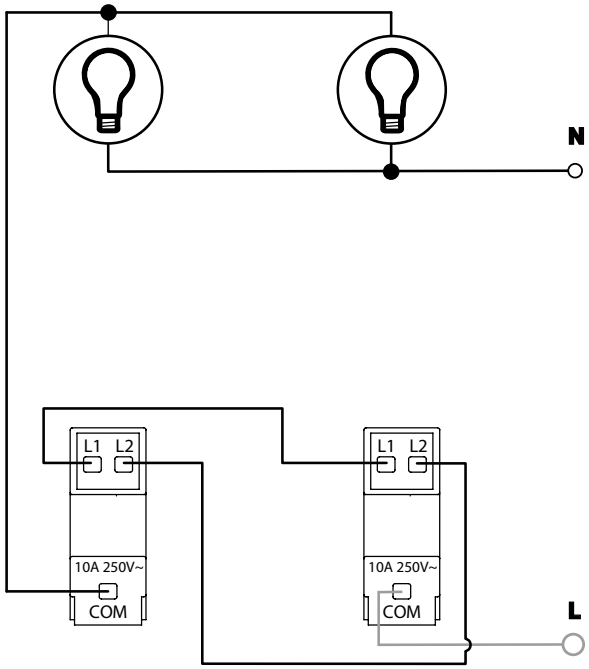

4c THREE WAY OPERATION

HOW TO SWITCH LIGHTS FROM 3 OR MORE LOCATIONS USING BUSTER & PUNCH 2-WAY AND INTERMEDIATE SWITCHES.

10AX Intermediate Switch and Toggle Switch

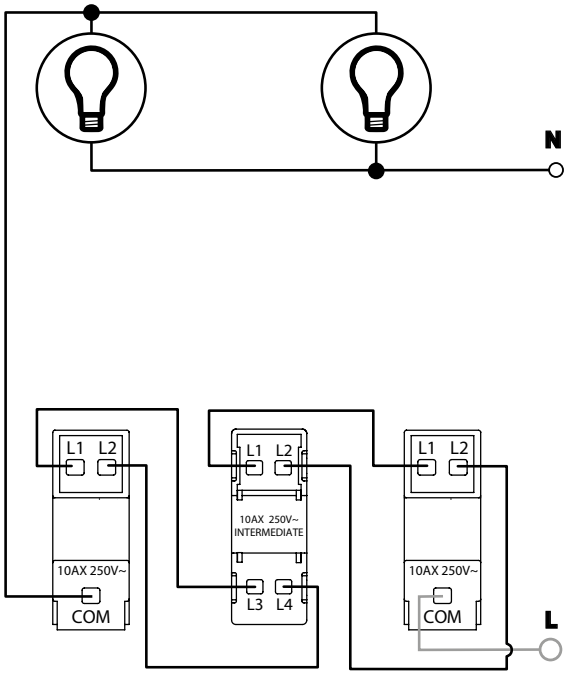

5 FIT PLATE TO WALL AND THEN FIT FRONT

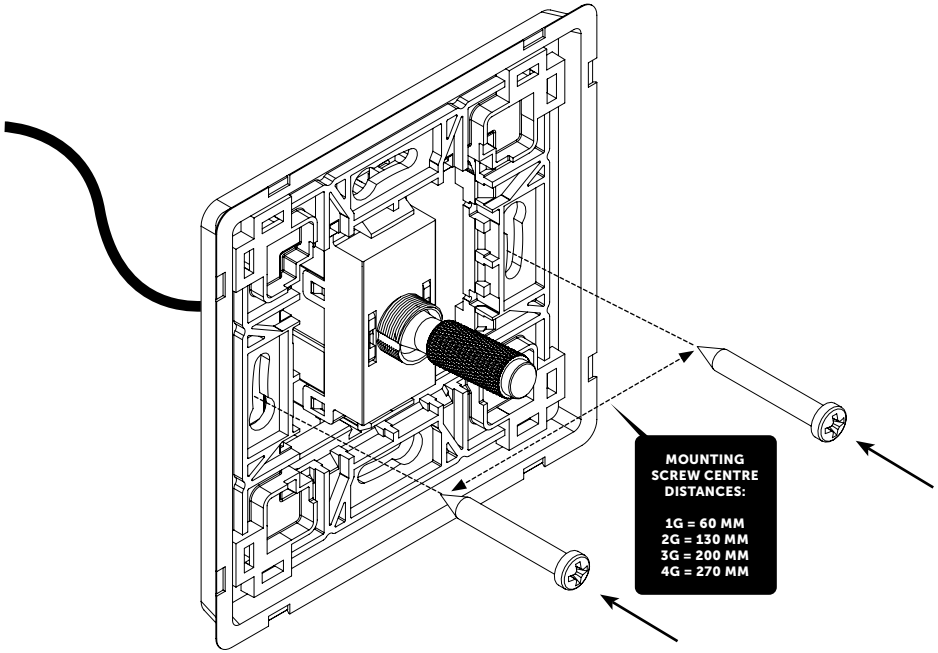

6 FIT FRONT PLATE

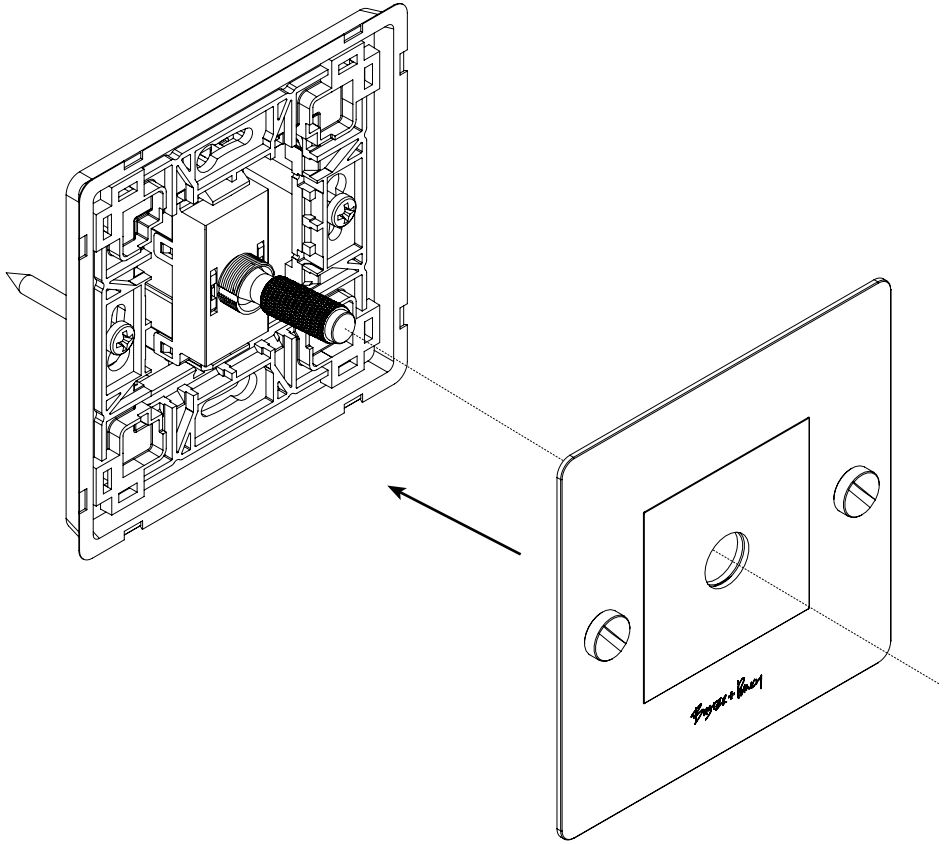

7 FIT TOGGLE NUT

Please ensure toggle nuts **A** are sufficiently tightened using the toggle nut tool **B**. Please do not overtighten, or you may damage the threads.

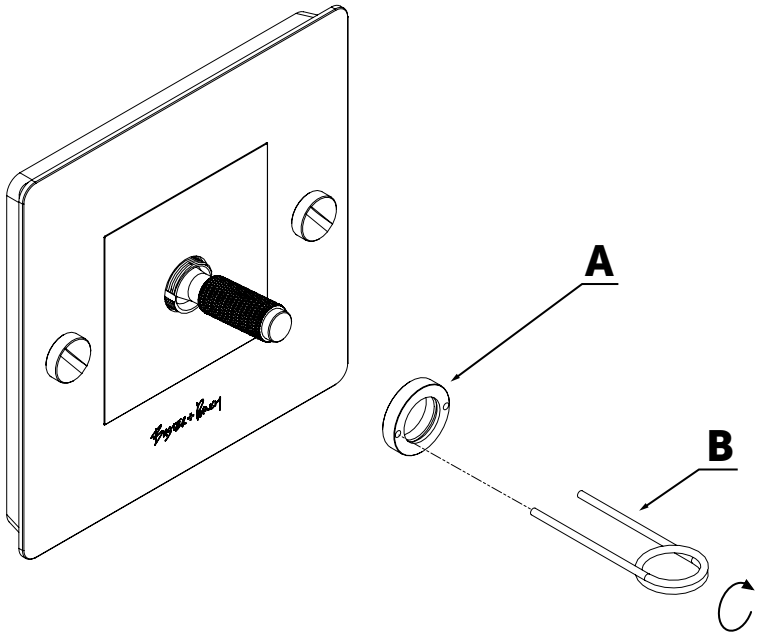

***NOTE:**
When tightening threaded parts be careful not to cross thread. We recommend pushing and rotating the part anticlockwise until you feel a click, then tighten clockwise finger tight.

8 TURN POWER BACK ON.

[end. **ORDINARY.**]

BUSTER + PUNCH

LONDON

EU ELECTRICITY

Retractive Switch
(Push to Make)

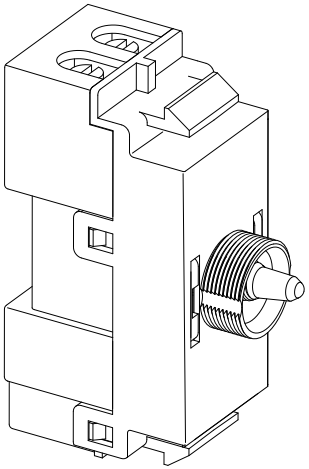

TECHNICAL SPECIFICATION
Retractive Switch (Push to Make)
10A 220 - 250VAC

IMPORTANT!
This product must be installed by a qualified professional. Turn off the power at the breaker prior to installing this product.

WARRANTY INFORMATION
The Warranty Period of Two (2) years from the date of the original purchase.

BUSTERANDPUNCH.COM
L0214

CE

RECYCLING ELECTRICAL PRODUCTS

Buster + Punch encourages all of its customers to make note of this symbol and avoid putting any waste electrical goods in your domestic waste bin or container. Please ensure you take your waste electrical goods to a suitable facility for disposal.

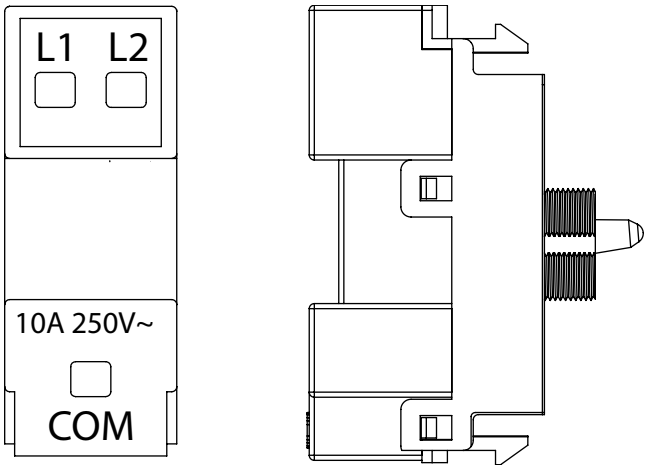

RETRACTIVE SWITCH

1

BEFORE COMMENCING WORK, ISOLATE THE MAINS POWER SUPPLY AND REMOVE THE FUSE BOX OR SWITCH OFF THE CIRCUIT BREAKER IN CONSUMER UNIT.

2 ASSEMBLE TOGGLE ARM

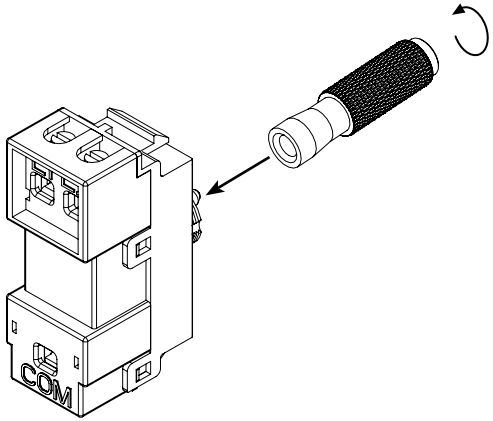

***NOTE:**
When tightening threaded parts be careful not to cross thread. We recommend pushing and rotating the part anticlockwise until you feel a click, then tighten clockwise finger tight.

3 FIT MODULE TO WALL PLATE

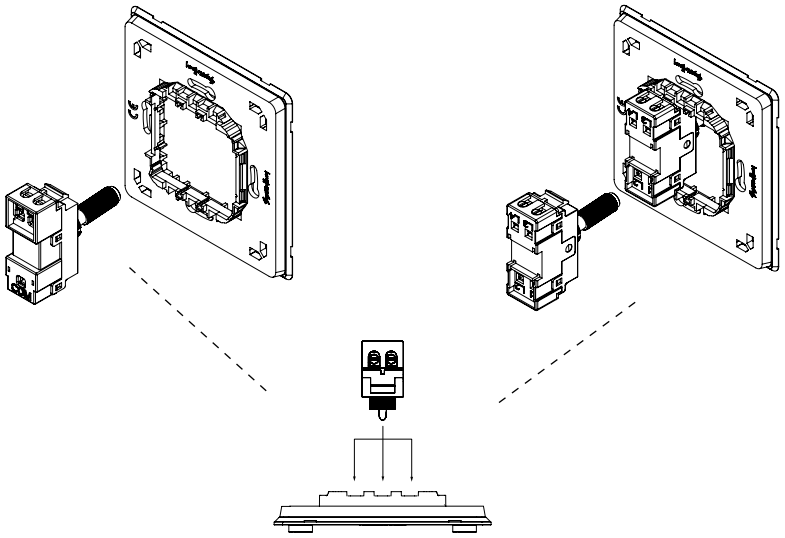

4a

Connect the wires as shown in appropriate wiring diagrams. Use green/yellow sleeving on earth conductors that are not insulated. Ensure terminals are properly tightened and no bare wire is visible. Push back unit into moulding box making sure conductors are not trapped.

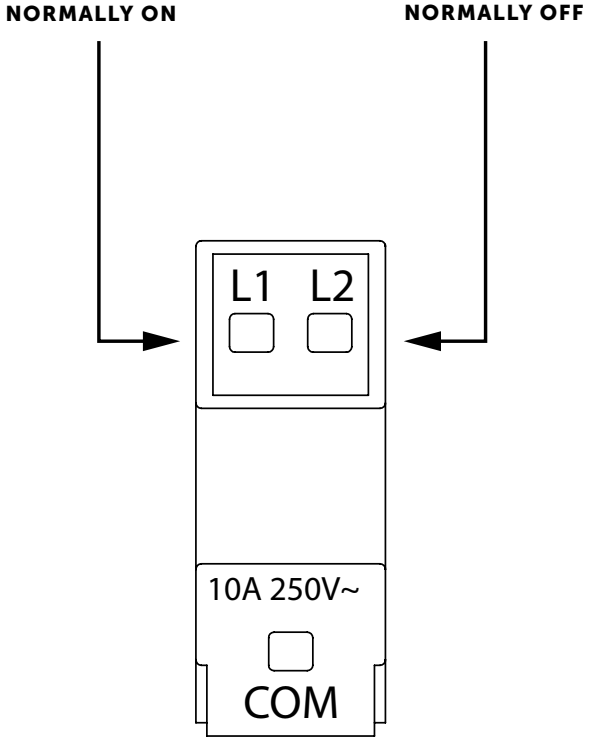

4b MULTIPLE LOCATION DIMMING

How to dim from multiple locations using Buster + Punch Retractive (push to make) Switch :

Press retractive toggles to switch lights ON/OFF. Press and hold toggle to increase brightness, release and press and hold to decrease brightness.

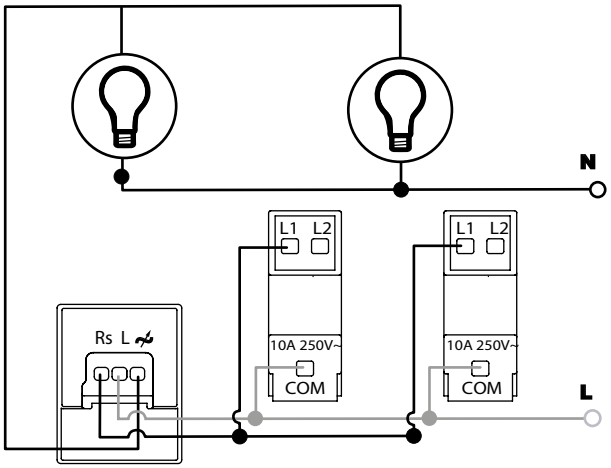

The Dimmer must always be connected to the LINE side of the load. You can have up to 20 retractive switch or push switch connected to your dimmer to control from multiple locations.

5 FIT PLATE TO WALL AND THEN FIT FRONT

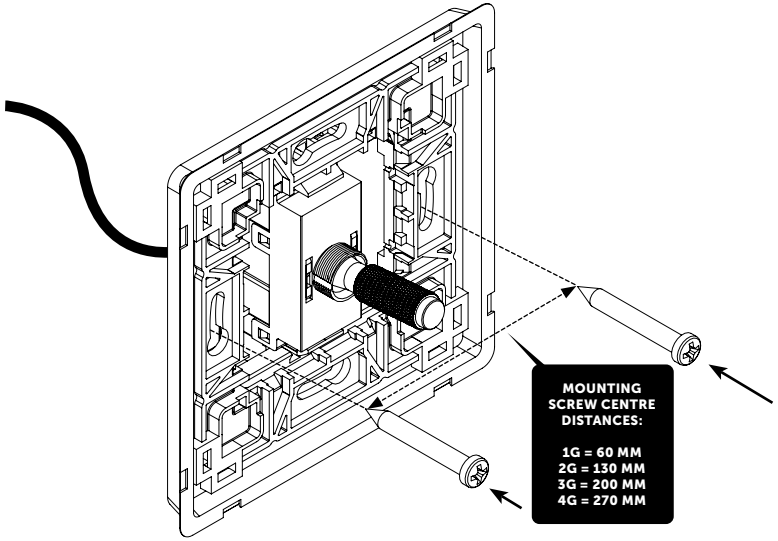

6 FIT FRONT PLATE

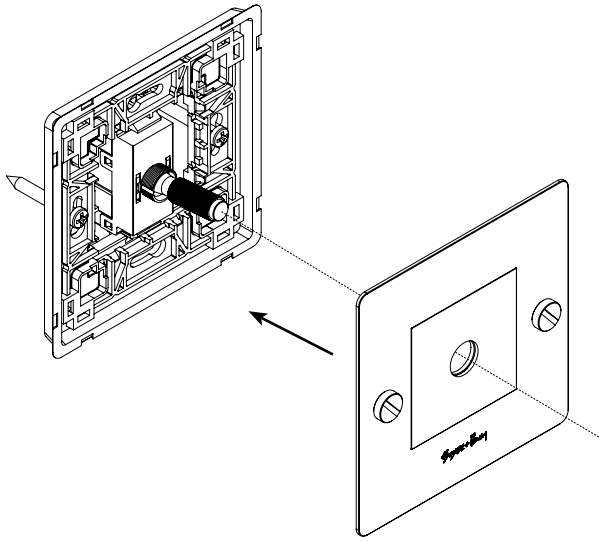

7 FIT TOGGLE NUT

Please ensure toggle nuts **A** are sufficiently tightened using the toggle nut tool **B**. Please do not overtighten, or you may damage the threads.

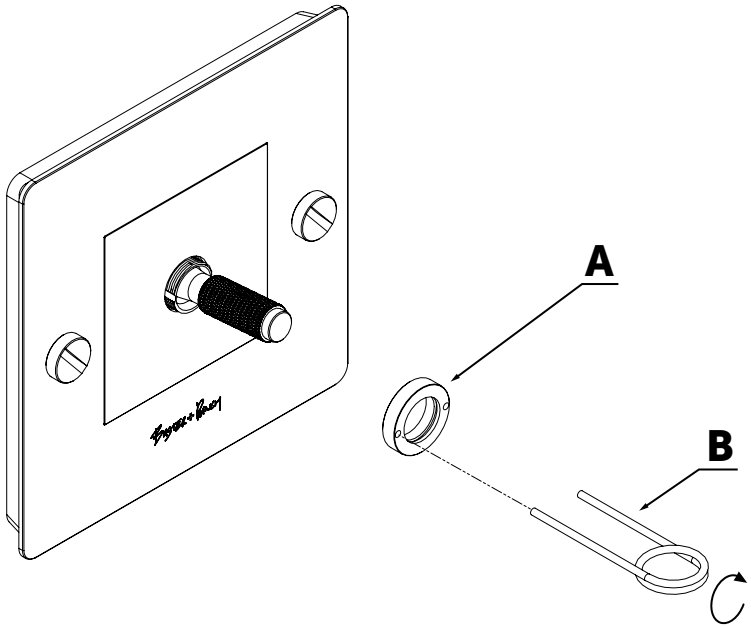

***NOTE:**
When tightening threaded parts be careful not to cross thread. We recommend pushing and rotating the part anticlockwise until you feel a click, then tighten clockwise finger tight.

8 TURN POWER BACK ON.

[end. **ORDINARY.**]

BUSTER+PUNCH
LONDON

EU ELECTRICITY

1-10V Dimmer Switch

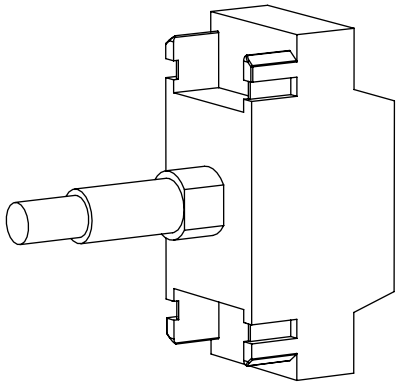

Recycling services for end-of-life electrical products should be offered by your local authority.
Recycling services for metal faceplates may also be available in your locality.

BUSTERANDPUNCH.COM

OVERVIEW

Thank you for choosing a VARILIGHT dimmer switch. This dimmer switch is designed for high frequency dimmable ballasts that require a 0–10V or 1–10V control signal.

Doyle & Tratt Products Ltd, Carylls Lea, Faygate, Horsham, W. Sussex, RH12 4SJ, UK. +44 (01293) 223333

Varilight Europe Kft, 2600 Vác, Althann Mihály Frigyes utca 2, Hungary.

LOADING

This dimmer switch is designed to work with one or multiple dimmable ballasts up to 20mA.
The mains switch is rated at 230V a.c. 6A maximum.

Do not use this dimmer switch for any other purpose.
The dimmer switch will be damaged if used for these applications.

Do not connect the 1–10V control terminals to the mains.
Incorrect use will make your guarantee invalid.

WARNING: The switch in this product is rated at 6A. Check the in-rush current for LED bulbs or drivers does not exceed 6A before connecting. Fit inrush current limiters where necessary.

GUARANTEE

In case of any defect, return the dimmer to our service department. Varilight undertakes to repair or replace, at its discretion, goods which have become defective within 10 years of purchase, solely as a result of faulty materials and workmanship, provided that:-

a) The unit has been correctly fitted according to the instructions and has not been used with an incompatible load, or overloaded beyond its rating, and has only been used on a 200-250V a.c. power supply.

b) The dimmer module has not been tampered with or taken apart. However, for your convenience, it is perfectly in order to remove a faulty dimmer module from multi-gang dimmers by pulling off the knob and unscrewing the nut under the knob. You will then still have the remaining modules working whilst we service your faulty module.

c) The unit is securely packed and safely returned to either address listed in the overview section above, together with a letter stating the guarantee registration number below, the date and place of purchase, your contact details and return address, the type and wattage of the lighting or other load being controlled and the details of the fault. This guarantee states Varilight's entire liability, which does not extend to cover consequential loss or damage or installation costs arising from a defective product. The guarantee does not apply to problems arising from any incompatibility between your lamps and the dimmer switch. This guarantee does not in any way affect the statutory rights of the purchaser and is offered so that you may have the benefit of our technical facilities.

In many cases products don't need replacing, so for further information and help with troubleshooting, see our FAQ page at www.varilight.co.uk/faqs, or contact our Customer Services by calling:
+44 (01293) 223333 or create a support ticket at www.varilight.co.uk/help.

GUARANTEE REGISTRATION NUMBER: F006

FITTING YOUR DIMMER SWITCH

Read the instructions below carefully.

Incorrect installation may damage the dimmer beyond repair. In case of any doubt or difficulty consult a qualified electrician.

1. Switch off at the mains, then remove the existing switch and disconnect the wiring from the switch terminals at the rear, taking note of the present wiring of the switch and the marking on the terminals. Where there are two or more wires together in the old switch, they must be kept together in the dimmer switch.

2. Most models can be fitted into a box with a minimum depth of 25mm, i.e. a normal plaster depth flush box or a normal surface mounted switch box. A box having 4 fixing lugs cannot be used without modifying it. The top and bottom lugs must be broken off or bent flat.

3. To connect the wiring for 1-way circuits or for 2-way circuits refer to the diagrams overleaf. If you are using a dimmer switch in a 2-way circuit then you can only use one dimmer switch in the circuit, an ordinary switch must be at the other end. Take care that no bare wires project out of the terminals. Keep wires together in a terminal if they were together in your old switch.

4. Use screened 2-core cable for the 1–10V control signal. The outer (screening) conductor should be earthed at one end. Do not connect the 1–10V control terminals to the mains.

5. Dimmer switches having a metal front plate must be earthed by means of the earthing point provided on the dimmer.

6. After connecting the wires screw the dimmer switch gently into the wall box so that the front plate is not distorted or cracked. Do not trap the wiring between the rear of the dimmer and the back of the wall box. Once installation is complete. Switch on the mains supply and switch on the dimmer, turning the control knob to give the desired light level.

IMPORTANT: Disconnect the dimmer before carrying out any circuit testing, such as insulation resistance testing. Failing to do so could damage a dimmer and make the guarantee invalid

WARNING: Do not apply products with metal faceplates directly to freshly plastered or damp surfaces as product may tarnish. If in doubt, use polythene as a temporary gasket to protect the product. Do not use masking tape on metal faceplates.

Please record the batch number printed on the side of the plastic moulding on the rear of the product. This will assist us in providing any technical support you may require. INSTALLERS: Please leave these instructions with your customer for future reference.	**F**
BATCH NO:	**REG. F007**

1-WAY CIRCUITS

A 1-way lighting circuit is a circuit in which the lighting is controlled from one location. A push-on/push-off dimmer switch has the advantage that it can be switched on and off with a push action, while keeping the lighting at the level chosen. When installing this product into a 1-way lighting circuit, copy the wiring configuration for the dimmer switch below. If retrofitting this product, the wires from your old switch can be connected either way round to the "C" and "L1" terminals of the dimmer switch. There is a spare terminal (L2) that you will not need to use for a 1-way circuit. You will then need to connect the signal wires from the ballast to the signal side of the dimmer (+ & -).

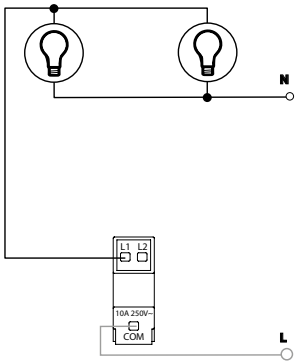

2-WAY CIRCUITS

2-way lighting circuits have two switches switching lights from two different locations (e.g. at the top and bottom of the stairs). In this configuration there must be one dimmer maximum per circuit.
If retrofitting this product, remove your old switch and copy the wiring configuration for your dimmer switch.
The wire(s) fitted in the "common" terminal of the old switch should be fitted into the "C" terminal of the dimmer switch. The wires fitted into the other two terminals of the old switch should be fitted either way round into terminals "L1" and "L2" of the dimmer switch. You will then need to connect the signal wires from the ballast to the signal side of the dimmer (+ & -).

Note: Dimmer switches have "C" next to "L1" & "L2" whereas most switches have "C" at the opposite end to "L1" & "L2".

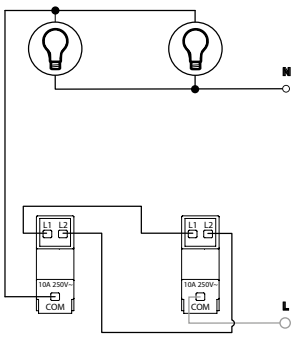

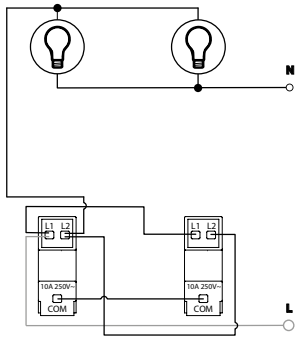

BUSTER+PUNCH
LONDON

EU ELECTRICITY

120W LED / 2 Way Dimmer Module

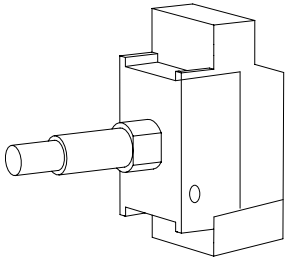

OVERVIEW

Thank you for choosing a VARILIGHT V-Pro intelligent programmable dimmer switch. Use only on an electricity supply of 230VAC 50Hz.

IMPORTANT: Read ALL sections below before installing this dimmer switch. V-Pro dimmers are set to run in trailing-edge mode (MODE 1) by default. This versatile mode is suitable for most types of lighting recommended below. The alternative trailing-edge mode (MODE 3) may improve the performance of some dimmable LEDs. Some other lighting loads, including some types of LED, perform best in Mode 2. This is a simulated leading edge mode (not TRIAC) which is suitable for use with certain types of LED light. To change the mode, follow the instructions under "Programming" below.
This product complies with European Safety Regulations (IEC 669-2-1 or BSEN 60669-2-1) when used in lighting circuits containing MCBs (miniature circuit breakers). These can be rated at 6A, 10A or 16A (preferably 6A for lighting circuits).Your guarantee is not affected if you have an older lighting circuit protected by fuse wire links.
At the time of installation it is your responsibility to make sure that the lamps in your installation are visibly on, even at the lowest brightness setting [see "Adjusting the Minimum Brightness" under "Programming"]. This will allow your installation to comply with the EU EcoDesign Regulation 1194/2012. To optimise the dimming range for LED lighting in particular the minimum brightness setting of the dimmer can be adjusted [see "Adjusting the Minimum Brightness" under "Programming"].

Doyle & Tratt Products Ltd, Carylls Lea, Faygate, Horsham, W. Sussex, RH12 4SJ, UK. +44 (01293) 223333
Varilight Europe Kft, 2600 Vác, Althann Mihály Frigyes utca 2, Hungary.

Recycling services for end-of-life electrical products should be offered by your local authority.
Recycling services for metal faceplates may also be available in your locality.

BUSTERANDPUNCH.COM

LOADING

Maximum loads for V-Pro dimmer switches (please see www.varilight.co.uk for latest loading advice):
Always observe the recommended maximum load.

DIMMER SERIES / LIGHTING TYPE	**V-PRO** Grid Dimmer Push On/Off	**V-PRO** Standard Dimmer Push On/Off			
	MULTI GANG Per Gang	**1-GANG**	**2-GANG** Per Gang	**3-GANG** Per Gang	**4-GANG** Per Gang
DIMMABLE LED	See product label for loading information. For the latest advice, visit www.varilight.co.uk/leds				

THIS SWITCH IS SUITABLE FOR
- Dimmable LED Lighting
-Good quality dimmable electronic low voltage transformers (including those requiring trailing-edge control) [see "Transformers"]

THIS SWITCH IS NOT SUITABLE FOR
- Non-dimmable LED lighting
- Non-dimmable fluorescent bulbs and tubes
- Wire-wound or toroidal transformers
- Electric motors (e.g. Fans)
- TRIAC dimmable drivers (Choose V-Com series dimmers)

OVERLOAD PROTECTION

This dimmer switch is protected against overload. If an overload occurs it will automatically turn off until the overload is removed and the dimmer switch is switched off and then switched back on again. However, if the dimmer switch receives a total short-circuit it may be damaged beyond repair.

TRANFORMERS

Use only with quality dimmable **electronic** transformers. For optimum performance choose VARILIGHT transformers. Do not use with wirewound or toroidal transformers, or TRIAC dimmable drivers (choose V-Com for TRIAC dimmable. To calculate load, add the VA ratings of the transformers (not the wattage of the bulbs). Choose transformers with a maximum rating close to their lamp load (e.g. Use a 50VA, 60VA or 70VA transformer to control a 50W low voltage bulb).
N.B. Certain transformers may not behave according to their power rating when used with a dimmer. An overload will result in the safety features switching the dimmer off. If so, change your transformer(s) (VARILIGHT transformer(s) recommended); or remove one (or some) transformer(s) from the circuit; or choose a higher rated dimmer.

Please record the batch number printed on the side of the plastic moulding on the rear of the product. This will assist us in providing any technical support you may require. INSTALLERS: Please leave these instructions with your customer for future reference.	**J_P**
BATCH NO:	**REG. JP012** Version 14A & Later

10 YEAR GUARENTEE

Varilight undertakes to repair or replace, at its discretion, goods which have become defective within 10 years of purchase, solely as a result of faulty materials and workmanship, provided that:-

A) The unit has been correctly fitted according to the instructions and has not been used with an incompatible load, fluorescent tubes, or overloaded beyond its rating, and has only been used on a 230VAC 50Hz power supply.
B) The dimmer module has not been tampered with or taken apart. However, for your convenience, it is perfectly in order to remove a faulty dimmer module from multi-gang dimmers by pulling off the knob and unscrewing the nut under the knob. You will then still have the remaining modules working whilst we service your faulty module.
C) The unit is securely packed and safely returned to either address listed in the overview section above, together with a letter stating the guarantee registration number below, the date and place of purchase, your contact details and return address, the type and wattage of the lighting or other load being controlled and the details of the fault. This guarantee states Varilight's entire liability, which does not extend to cover consequential loss or damage or installation costs arising from a defective product. The guarantee does not apply to problems arising from any incompatibility between your lamps and the dimmer switch. This guarantee does not in any way affect the statutory rights of the purchaser and is offered so that you may have the benefit of our technical facilities.

In many cases products don't need replacing, so for further information and help with troubleshooting, see our FAQ page at www.varilight.co.uk/faqs, or contact our Customer Services by calling +44 (01293) 223333 or create a support ticket at www.varilight.co.uk/help.

GUARANTEE REGISTRATION NUMBER: JP012

WARNING: Do not apply products with metal faceplates directly to freshly plastered or damp surfaces as product may tarnish. If in doubt, use polythene as a temporary gasket to protect the product. Do not use masking tape on metal faceplates.

FITTING THE DIMMER SWITCH

Read the instructions below carefully. Incorrect installation may damage the dimmer beyond repair.
In case of any doubt or difficulty consult a qualified electrician.

1. Switch off at the mains, and then remove the existing switch from the wall. Take note of the present wiring of the switch and the marking on the terminals. Disconnect the existing switch and connect the dimmer switch. Where there are two or more wires together in the old switch, they must be kept together in the dimmer switch.
2. Ensure that any wall box is free of plaster lumps or projecting screw heads. Dimmer switches on single-sized plates can be fitted to wall boxes having 60.3mm screw fixing centres and those with double-sized plates to wall boxes with 120.6mm fixing centres. Dimmers can be fitted into a box with a minimum depth of 25mm for Classic plated products, or 35mm for Ultraflat and Screwless.. A box having 4 fixing lugs cannot be used without modifying it. The top and bottom lugs must be broken off or bent flat.
3. To connect the wiring for 1-way or 2-way circuits refer to the diagrams to the right under the heading "1-Way, 2-Way and Multi-Way Circuits". Take care that no bare wires project out of the terminals. Keep wires together in a terminal if they were together in your old switch.
4. Dimmer switches fitted to a metal faceplate must be earthed by means of the marked earthing point on the faceplate.
5. After connecting the wires screw the dimmer switch gently into the wall box so that the front plate is not distorted or cracked. Do not trap the wiring between the rear of the dimmer and the back of the wall box.
6. Once installation is complete. Switch on the mains supply and switch on the dimmer.

Important: Disconnect the dimmer before carrying out insulation resistance testing. Failing to do so could damage a dimmer and make the guarantee invalid.

PROGRAMMING

OPTIMISING THE PERFORMANCE OF YOUR DIMMER SWITCH

When you first install the dimmer switch it will automatically default to trailing-edge MODE 1. This mode is the best one for most types of lighting but for some lighting loads you may be able to improve the dimming performance by changing the driving mode. [See "Changing the driving mode" below.] You can always reset to trailingedge MODE 1. Additionally, the minimum brightness setting of the dimmer can be adjusted to achieve the optimum dimming range for a particular load as follows. (You may also need to refer to these instructions if you change your lights to a different type at a later date so please keep them for reference).

ADJUSTING THE MINIMUM BRIGHTNESS

If your lights are flickering when they are dimmed to a low level you can increase the minimum brightness setting of the dimmer, which may prevent this from happening. If the lights are brighter than you would like when the dimmer is set to minimum, you can try reducing the minimum brightness setting of the dimmer.

1. Switch on and set the dimmer knob to the MINIMUM position (turn fully anticlockwise).
2. Turn the lights off and back on again. OFF – ON, roughly once per second.
3. Repeat step 2 at least twice more. OFF – ON – OFF – ON, roughly once per second.
4. The lights will step up and down in brightness to show that the dimmer is in CONFIGURATION MODE, then either stay at a low light level or go off.
5. Turn the knob fully clockwise. The lights will come on and allow you to adjust the minimum brightness.
6. Slowly adjust to the brightness that you are happy with as the minimum. Leave the dimmer in this position.
7. After 3 seconds the dimmer will notice that you have stopped adjusting the minimum. The lights will step up and down in brightness to show that the dimmer has returned to normal operation.
8. Continue to use the dimmer as normal, with your new minimum brightness.

ADJUSTING THE MAXIMUM BRIGHTNESS

If your lights are flickering when they are set to a high brightness level you can decrease the maximum brightness setting of the dimmer, which may prevent this from happening. If the lights are not as bright as you would like when the dimmer is set to maximum, you can try increasing the maximum brightness setting of the dimmer.

1. Switch off and set the dimmer knob to the MAXIMUM position (turn fully clockwise).
2. Turn the lights on and back off again. ON – OFF, roughly once per second.
3. Set the dimmer knob to the MINIMUM position (turn fully anticlockwise).
4. Turn the lights on and back off again. ON – OFF, roughly once per second.
5. Set the dimmer knob to the MAXIMUM position (turn fully clockwise).
6. Turn the lights on.
7. The lights will step up and down in brightness to show that the dimmer is in CONFIGURATION MODE, then either stay at a low light level or go off.
8. Turn the knob fully anticlockwise. The lights will come on and allow you to adjust the maximum brightness.
9. Adjust the brightness that you are happy with as the maximum. Leave the dimmer in this position.
10. After 3 seconds the dimmer will notice that you have stopped adjusting the maximum. The lights will step up and down in brightness to show that the dimmer has returned to normal operation.
11. Continue to use the dimmer as normal, with your new maximum brightness.

PROGRAMMING (CONT.)

CHANGING THE DRIVING MODE

You may be able to improve the performance of your lamps by changing the driving mode to MODE 3, or with some types of lamp MODE 2.
NB. It has been noted that some LEDs do not show the programming as well as others. If you are having difficulty seeing the programming steps, you can replace one LED lamp with a halogen one for the duration of the programming in order to see the steps more clearly.

1. Switch on and set the dimmer knob to the MAXIMUM position (turn fully clockwise).
2. Turn the lights off and back on again. OFF – ON, roughly once per second.
3. Repeat step 2 at least twice more. OFF – ON – OFF – ON, roughly once per second.
4. The lights will step up and down in brightness to show that the dimmer is in CONFIGURATION MODE, then either stay at a low light level or go off.
5. To select MODE 3, first turn the knob fully anti-clockwise then fully clockwise. For MODE 2, just turn the knob fully anti-clockwise and leave it for a couple of seconds.
6. The lights will FLASH 3 TIMES or TWICE to show which mode the dimmer is in. The dimmer can be operated normally in the new mode.

N.B. The dimmer is designed to protect itself against excess current. Some types of LED light will draw too much current in MODE 2. In this case the dimmer will switch back automatically to MODE 1. The dimmer will turn off altogether if it is overloaded in MODE 1 or MODE 3.

To manually return the dimmer to MODE 1 follow the same procedure and at step 5 turn the knob fully anti-clockwise. The lights will FLASH ONCE to indicate that you have successfully returned the dimmer to MODE 1. [To check which mode the dimmer is operating in omit step 5.]

RESETTING THE DIMMER

If you change your lights you can reset the dimmer to the factory default minimum brightness setting and re-launch trailing-edge mode 1 as follows.

1. Switch on and set the dimmer knob to the MAXIMUM position.
2. Turn the lights off and back on again. OFF – ON, roughly once per second.
3. Repeat step 2 at least twice more. OFF – ON – OFF – ON, roughly once per second.
4. The lights will step up and down in brightness to show that the dimmer is in CONFIGURATION MODE, then either stay at a low light level or go off.
5. Within 5 seconds, repeat steps 2 and 3. OFF – ON – OFF – ON – OFF – ON , roughly once per second.
6. The dimmer will reset all its settings to factory defaults. The lights will come on, then fade away to off.
7. The dimmer will now operate in trailing-edge mode 1 and the minimum brightness setting will be reset to the factory default.
8. Continue to use the dimmer as normal.

DRIVE FUNCTION

Some LED lights require a large amount of power to come on and so do not illuminate at low brightness levels. This dimmer is equipped with a DRIVE function to cater for LED lights that require more power at start-up. To enable the DRIVE function:

1. Switch off and set the dimmer knob to the MINIMUM position (turn fully anticlockwise).
2. Turn the lights on and back off again. [ON-OFF] roughly once per second.
3. Set the dimmer knob to the MAXIMUM position (turn fully clockwise)
4. Turn the lights on and back off again. [ON-OFF] roughly once per second.
5. Set the dimmer knob to the MINIMUM position (turn fully anticlockwise)
6. Turn the lights on.
7. The lights will step up and down in brightness to show that the dimmer is in CONFIGURATION MODE, then either stay at a low light level or go off.
8. Slowly increase the power until your lamps illuminate. Leave the dimmer in this position.
9. After 3 seconds the dimmer will notice that you have stopped adjusting the DRIVE. The lights will step up and down in brightness to show that the dimmer has returned to normal operation.
10. Continue to use the dimmer as normal with your new DRIVE level.

To disable the DRIVE function, repeat the above but omit step 8.

PROGRAMMING (CONT.)

CHILD LOCK

You can prevent your dimmer from accidentally going into programming mode by following these instructions. To enable the Child Lock feature

1. Switch off the dimmer and set the dimmer knob to the MAXIMUM position (turn fully clockwise).
2. Turn the lights on and back off again twice. ON – OFF – ON – OFF, roughly once per second.
3. Set the dimmer knob to the MINIMUM position (turn fully anticlockwise).
4. Turn the lights on and back off again twice. ON – OFF – ON – OFF, roughly once per second.
5. Set the dimmer knob to the MAXIMUM position (turn fully clockwise).
6. Turn the lights ON – OFF – ON, roughly once per second.
7. The lights will step up and down in brightness to show that the dimmer has returned to normal operation.
8. Continue to use the dimmer as normal, with your new Child Lock setting.
9. To disable Child Lock, repeat the whole procedure again.

1-WAY, 2-WAY AND MULTI-WAY CIRCUITS

Your VARILIGHT V-Pro intelligent dimmer switch is suitable for 1-way or 2-way lighting circuits. It has a push on/push off action to switch and a rotary action to dim. There are 3 screw terminals per module.

1-WAY CIRCUITS

In 1-way lighting circuits each light is controlled by one switch. Your dimmer switch should replace this switch. See Figure 1. Remove your old switch and copy the wiring configuration for your dimmer switch. Connect wires either way round to the 'C' terminal and one of the 'L' terminals. The other 'L' terminal is not used in a 1-way circuit.

2-WAY CIRCUITS

2-way lighting circuits have two switches turning the same lights on and off from 2 different locations (eg. at the top and bottom of the stairs). You must only replace one of these switches with a dimmer switch or the lights will flicker. See Figures 2 and 3 which show typical 2-way circuits. Remove your old switch and copy the wiring configuration for the dimmer.

The wire(s) fitted in the "common" terminal of the old switch should be fitted into the "C" terminal of the dimmer switch. The wires fitted into the other two terminals of the old switch should be fitted either way round into terminals "L1" and "L2" of the dimmer switch.

MULTI-GANG Dimmer switchES

To fit 2 gang (or 3 or 4 gang) dimmer switches treat each group of terminals at the back of the unit as a separate dimmer switch wiring them into the lighting circuits as described above. If required, one terminal from each dimmer module may be joined together with a short length of wire to copy the wiring configuration of the old switch.

BUSTER+PUNCH
LONDON

EU ELECTRICITY

2-Way Dummy Dimmer Module

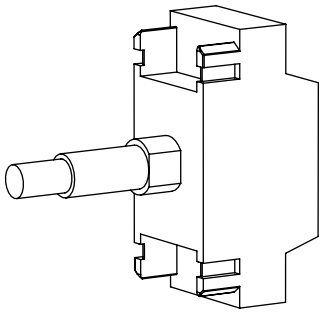

OVERVIEW

Thank you for choosing a VARILIGHT switch. This switch is designed for mains voltage lighting and can be used to switch almost all lighting loads. It is a replacement dimmer module for use with non-dimmable loads for switching only to coordinate with other dimmer switches. Use only on an electricity supply of 230 volts AC.

IMPORTANT: Read ALL sections below before installing this switch.

Doyle & Tratt Products Ltd, Carylls Lea, Faygate,
Horsham, W. Sussex, RH12 4SJ, UK.
+44 (01293) 223333

Varilight Europe Kft, 2600 Vác, Althann Mihály Frigyes utca 2, Hungary.

For FAQs, please visit: www.varilight.co.uk/faqs

Recycling services for end-of-life electrical products should be offered by your local authority.
Recycling services for metal faceplates may also be available in your locality.

BUSTERANDPUNCH.COM

LOADING

Maximum load for Switch modules is 6A.

THIS SWITCH IS SUITABLE FOR: Most types of non-dimmable lighting

THIS SWITCH IS NOT SUITABLE FOR: Dimming (switch only)

GUARANTEE

In case of any defect, return the dimmer to our service department. Varilight undertakes to repair or replace, at its discretion, goods which have become defective within 10 years of purchase, solely as a result of faulty materials and workmanship, provided that:-

A) The unit has been correctly fitted according to the instructions and has not been used with an incompatible load, fluorescent tubes, or overloaded beyond its rating, and has only been used on a 200-250V a.c. power supply.
B) The dimmer module has not been tampered with or taken apart. However, for your convenience, it is perfectly in order to remove a faulty dimmer module from multi-gang dimmers by pulling off the knob and unscrewing the nut under the knob. You will then still have the remaining modules working whilst we service your faulty module.
C) The unit is securely packed and safely returned to either address listed in the overview section above, together with a letter stating the guarantee registration number below, the date and place of purchase, your contact details and return address, the type and wattage of the lighting or other load being controlled and the details of the fault. This guarantee states Varilight's entire liability, which does not extend to cover consequential loss or damage or installation costs arising from a defective product. The guarantee does not apply to problems arising from any incompatibility between your lamps and the dimmer switch. This guarantee does not in any way affect the statutory rights of the purchaser and is offered so that you may have the benefit of our technical facilities.

In many cases products don't need replacing, so for further information and help with troubleshooting, see our FAQ page at www.varilight.co.uk/faqs, or contact our Customer Services by calling:
+44 (01293) 223333 or create a support ticket at www.varilight.co.uk/help.

GUARANTEE REGISTRATION NUMBER: DD006

FITTING YOUR DIMMER

Read the instructions below carefully. Incorrect installation may damage the dimmer beyond repair.
In case of any doubt or difficulty consult a qualified electrician.
1. Switch off at the mains, then remove the existing switch and disconnect the wiring from the switch terminals at the rear, taking note of the present wiring of the switch and the marking on the terminals. Where there are two or more wires together in the old switch, they must be kept together in the switch.
2. Ensure that any wall box is free of plaster lumps or projecting screw heads. Switches on single-sized plates can be fitted to wall boxes having 60.3mm screw fixing centres and those with doublesized plates to wall boxes with 120.6mm fixing centres. Most models can be fitted into a box with a minimum depth of 25mm. A box having 4 fixing lugs cannot be used without modifying it. The top and bottom lugs must be broken off or bent flat.
3. To connect the wiring for 1-way or 2-way circuits refer to the diagrams below. Take care that no bare wires project out of the terminals. Keep wires together in a terminal if they were together in your old switch.
4. Switches having a metal front plate must be earthed by means of the earthing point on the plate.
5. After connecting the wires screw the switch gently into the wall box so that the front plate is not distorted or cracked. Do not trap the wiring between the rear of the dimmer and the back of the wall box.
6. Once installation is complete. Switch on the mains supply and switch on.

WARNING: Do not apply products with metal faceplates directly to freshly plastered or damp surfaces as product may tarnish. If in doubt, use polythene as a temporary gasket to protect the product. Do not use masking tape on metal faceplates.

WARNING: The switch in this product is rated at 6A. Check the in-rush current for LED bulbs or drivers does not exceed 6A before connecting. Fit inrush current limiters where necessary.

BUSTER+PUNCH
LONDON

EU ELECTRICITY

EU Intermediate Dummy Dimmer
/ 3-Way

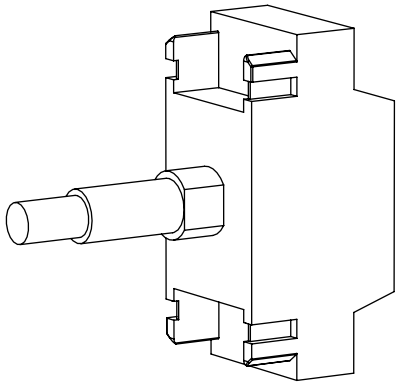

Recycling services for end-of-life electrical products should be offered by your local authority.
Recycling services for metal faceplates may also be available in your locality.

BUSTERANDPUNCH.COM

FITTING INSTRUCTIONS

Please read these instructions carefully before beginning any electrical work and retain them for future reference. The product should be installed in accordance with the current addition of the IEE Wiring regulations. If in doubt, consult a qualified electrician.

1. Always switch OFF the mains supply and remove the appropriate fuse or switch off the appropriate circuit breaker before beginning electrical work.
2. Always use cable of the correct rating and type.
3. The layout of the terminals may differ between fittings so check the location of terminal connections carefully before wiring.
4. Make electrical connections according to the relevant diagram ensuring no bare wires protrude from the terminals.
5. If the product has an earth terminal connect the fixed earth wire to it and then connect a short length of wire from the earth terminal on the product to the earth terminal on the wall box. The earth wire should be sheathed with green and yellow sleeving.
6. Screw plate to wall using fixing screws supplied.
7. Switch on the mains supply.

For FAQs, please visit: www.varilight.co.uk/faqs

GUARANTEE

If this item becomes defective within 10 years of purchase, Varilight undertakes to repair or replace the item, at its discretion, and solely as a result of faulty materials or workmanship, provided that the unit has been correctly fitted according to the instructions, has not been used overloaded beyond its rating, tampered with or taken apart. Pack the unit securely and return it to:

Service Department, Carylls Lea, Faygate,
Horsham, West Sussex, RH 12 4SJ (Tel. +44(01293) 223333),

Together with a letter stating the guarantee registration number below, the date and place of purchase, the type and wattage of the lighting or other load being controlled and the details of the fault. This guarantee states Varilight's entire liability, which does not extend to cover consequential loss or damage or installation costs arising from a defective product. This guarantee does not in any way affect the statutory rights of the purchaser and is offered so that you may have the benefit of our technical facilities.

Guarantee Registration Number: WA004

EXAMPLE WIRING - 1-WAY SWITCH

SWITCHED LIVE

For 2 or more gangs the live wire may be connected to each COM terminal by means of a short length of sleeved wire.

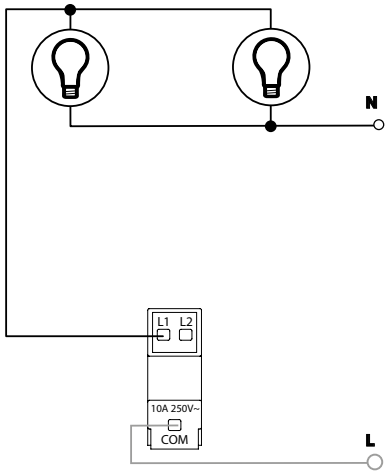

EXAMPLE WIRING - INTERMEDIATE SWITCHES

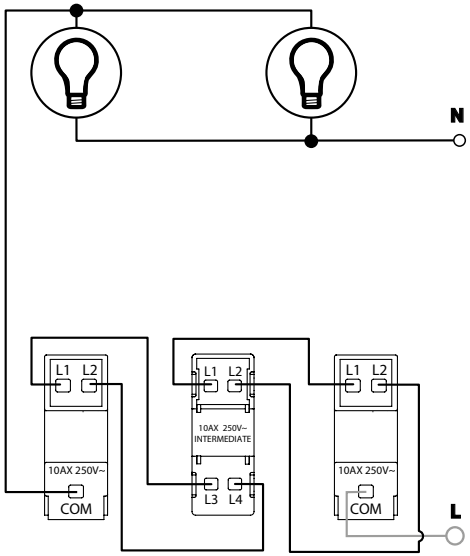

EXAMPLE WIRING - 2-WAY SWITCHES

There are two common forms of wiring for 2-way circuits. Either may be used.

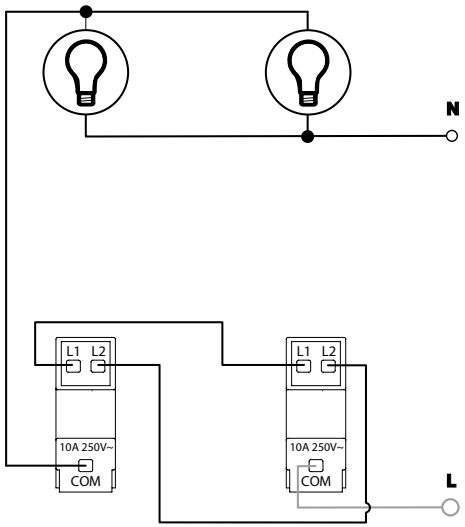

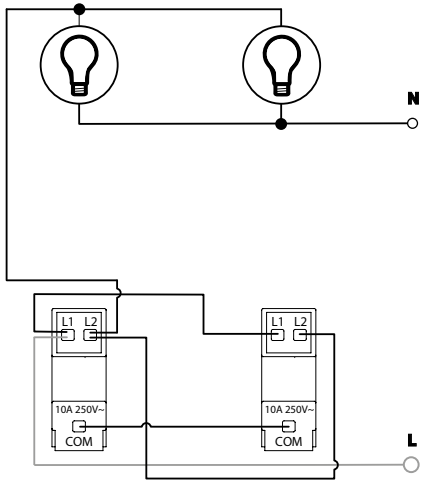

BUSTER+PUNCH
LONDON

EU ELECTRICITY

Socket Modules

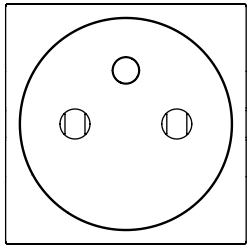

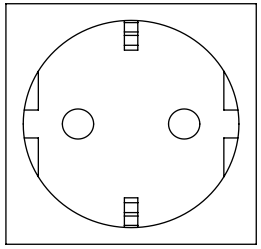

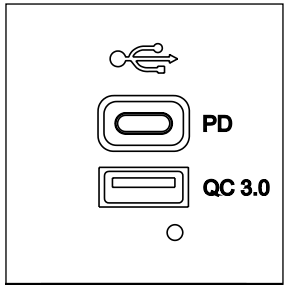

BUSTERANDPUNCH.COM
L0214

CE

SCHUKO SOCKET TYPE F

LIVE
NEUTRAL
EARTH

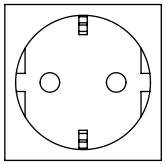

SAFETY INSTRUCTIONS

- This module is suitable for dry locations only.
- This product should be installed by a qualified professional.
- The maximum allowed rated current is 16 A / 250 V~.

INSTALLATION:

1. Connect the wiring to the terminals according to the markings.
2. Snap the module into the mounting plate.

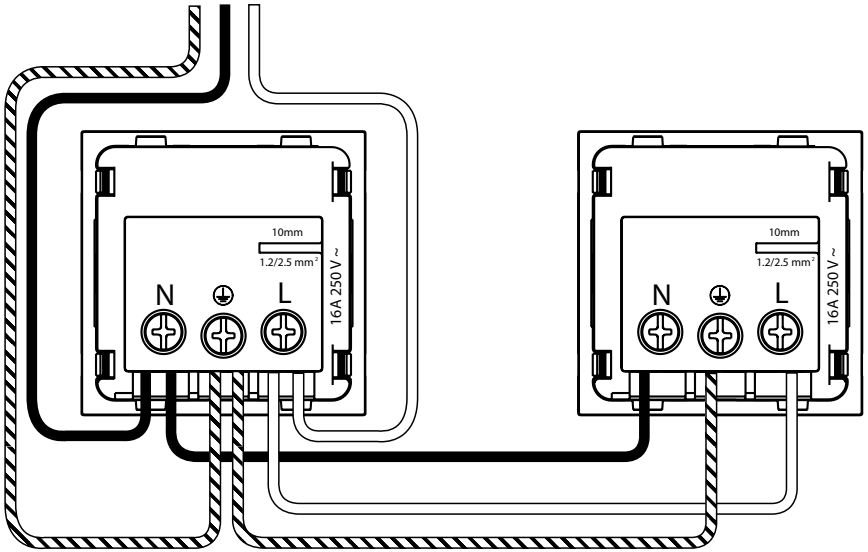

FRANCE BELGIUM SOCKET TYPE C + E

LIVE

NEUTRAL

EARTH

SAFETY INSTRUCTIONS

- This module is suitable for dry locations only.
- This product should be installed by a qualified professional.
- The maximum allowed rated current is 16 A / 250 V~.

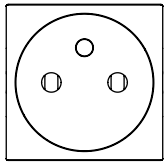

INSTALLATION:

1. Connect the wiring to the terminals according to the markings.
2. Snap the module into the mounting plate.

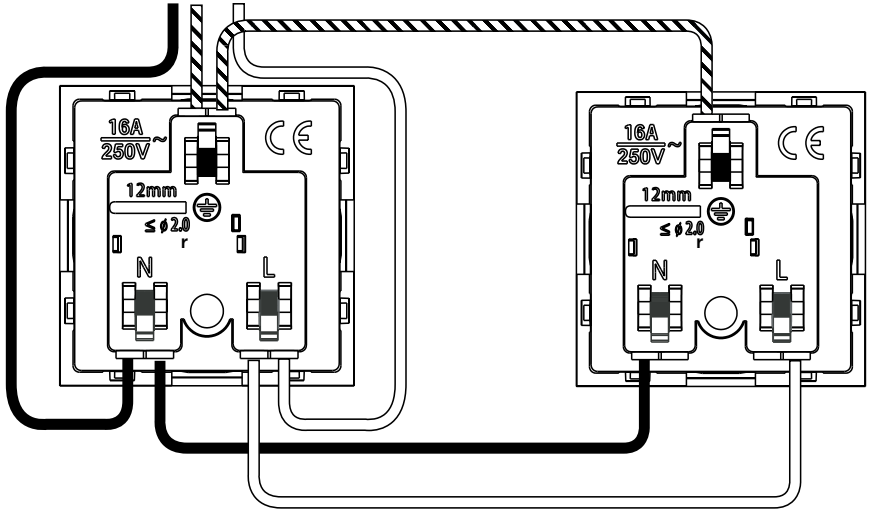

USB CHARGER TYPE-A+TYPE-C: 5V 1.5A EACH

LIVE

NEUTRAL

SAFETY INSTRUCTIONS

- This module is suitable for dry locations only.
- This product should be installed by a qualified professional.

USB CHARGER Type-A+Type-C: 5V 1.5A each
Input: 100-240VAC 50/60 Hz 0.5A
Output: 5VDC 3A, 9VDC 3A, 12VDC 2.5A, 15VDC 2A, 20VDC 1.5A
Total output power 30W MAX

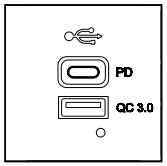

INSTALLATION:

1. Connect the wiring to the terminals according to the markings.
2. Snap the module into the mounting plate.

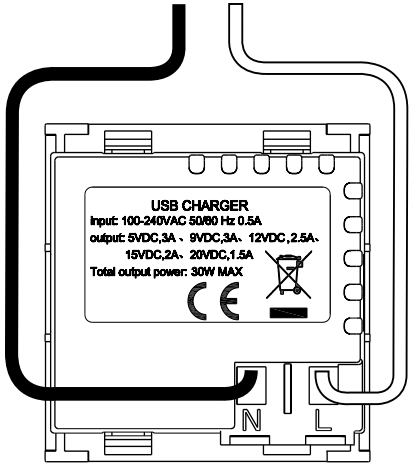

BUSTER + PUNCH

LONDON

EU ELECTRICITY

Modular Assembly

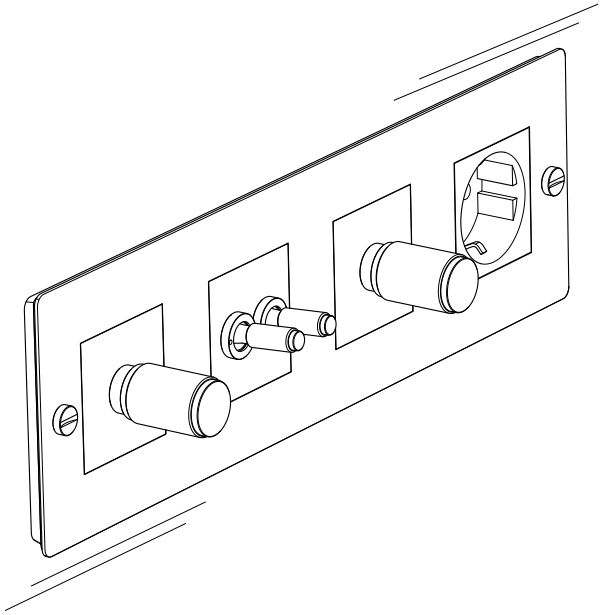

BUSTERANDPUNCH.COM

L0216

RECYCLING ELECTRICAL PRODUCTS

Buster + Punch encourages all of its customers to make note of this symbol and avoid putting any waste electrical goods in your domestic waste bin or container. Please ensure you take your waste electrical goods to a suitable facility for disposal.

BEFORE COMMENCING WORK, ISOLATE THE MAINS POWER SUPPLY AND REMOVE THE FUSE BOX OR SWITCH OFF THE CIRCUIT BREAKER IN CONSUMER UNIT.

1

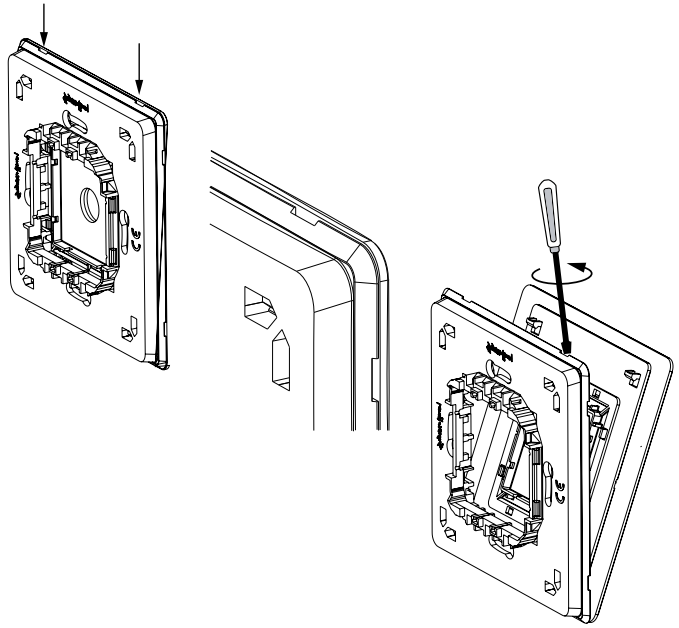

2

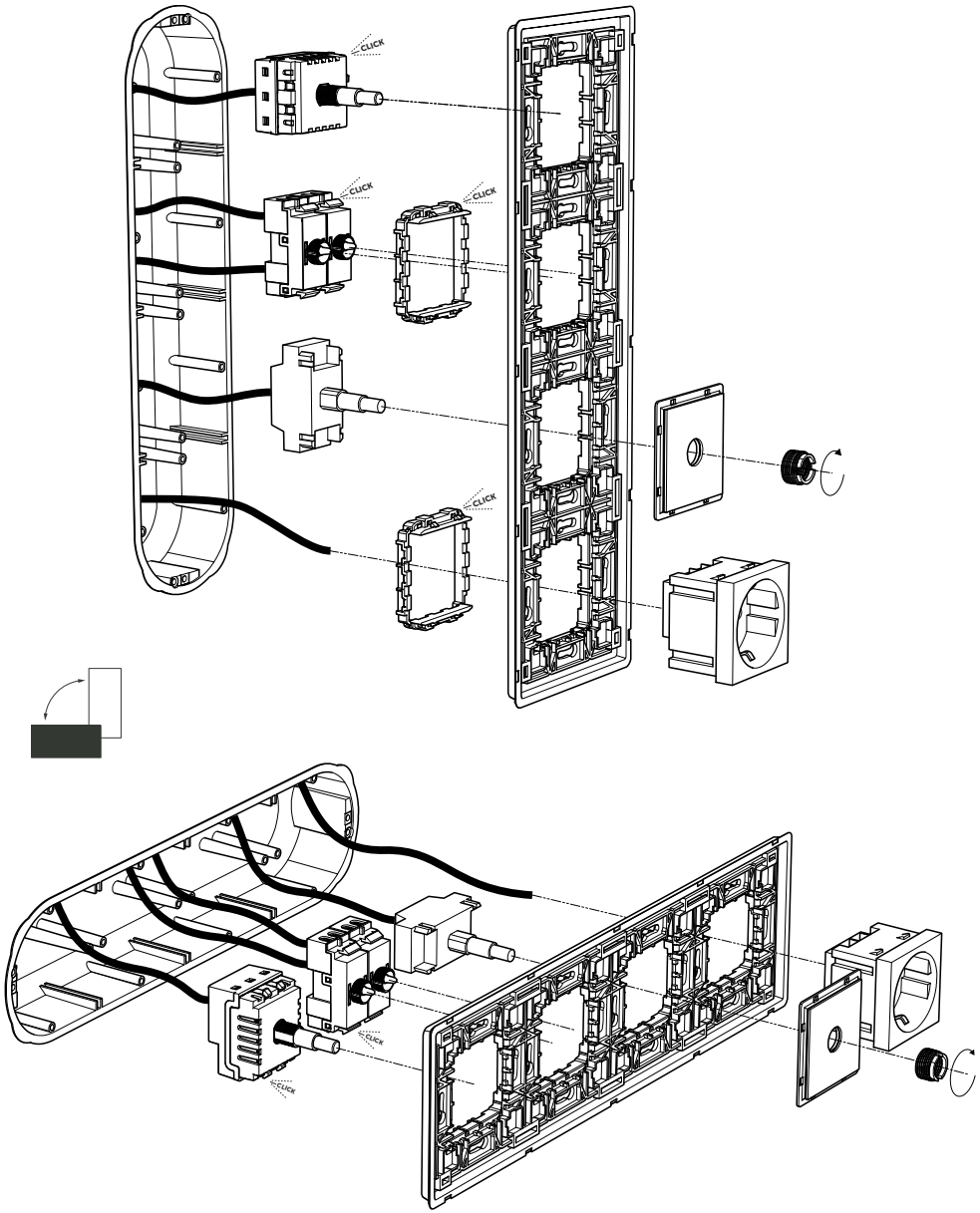
CLICK
CLICK
CLICK
CLICK
CLICK
CLICK

3

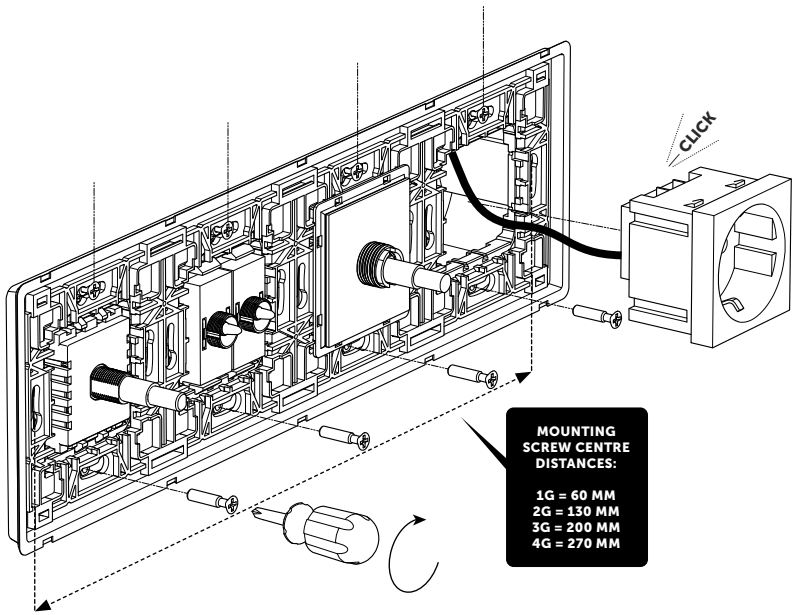
CLICK
MOUNTING SCREW CENTRE DISTANCES:
1G = 60 MM
2G = 130 MM
3G = 200 MM
4G = 270 MM

4

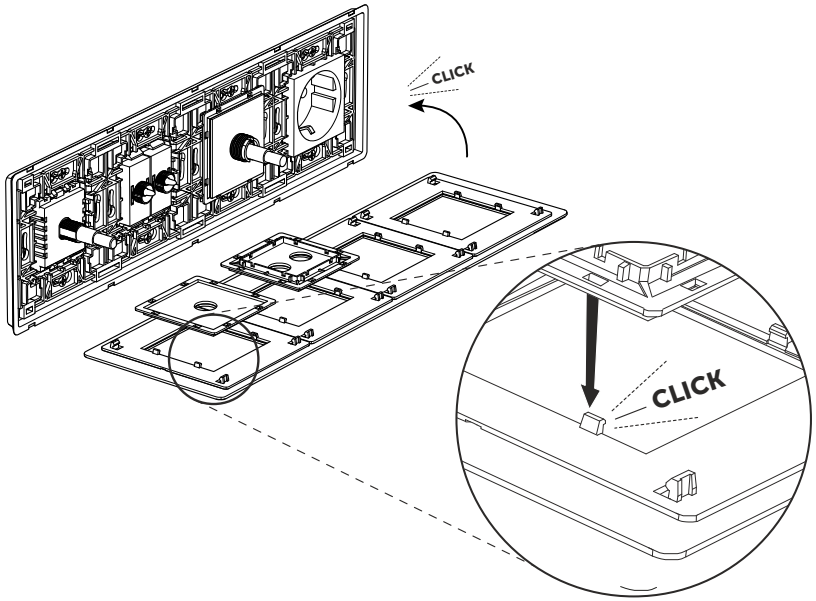
CLICK
CLICK

5

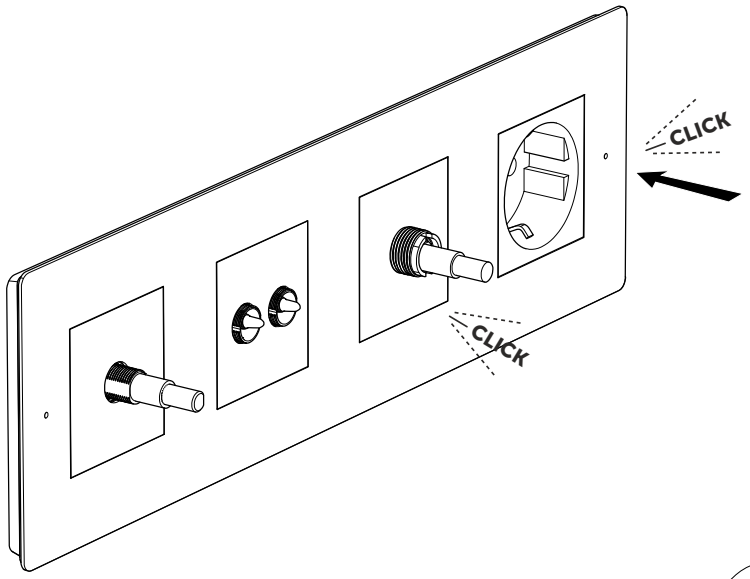

NOTE:

Due to manufacturing tolerances, dimmer knobs may be tight to fit.
To allow for easier assembly, insert a 5 – 5.5mm flat head screwdriver and rotate 360° to remove excess material from the flat section of the insert.
There will be some resistance (a little more than turning a key in a lock) and a small amount of material may come loose – this is normal.
Ensure screwdriver is held straight to avoid misalignment and off-centre rotation when installed.

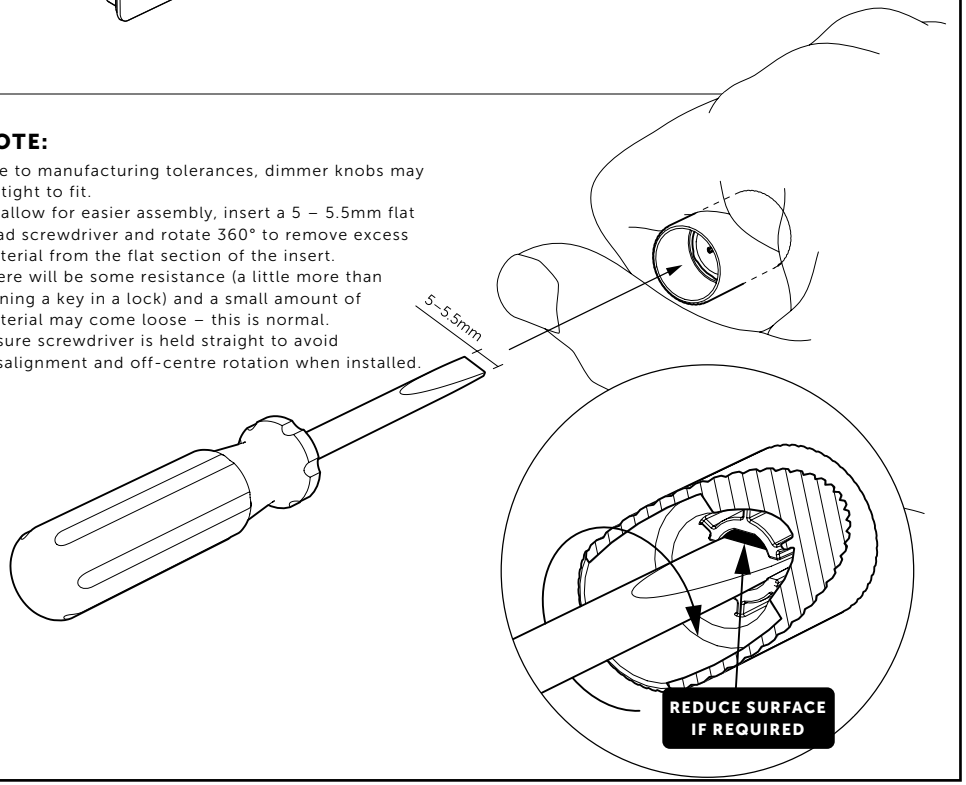

6

CROSS DETAILS

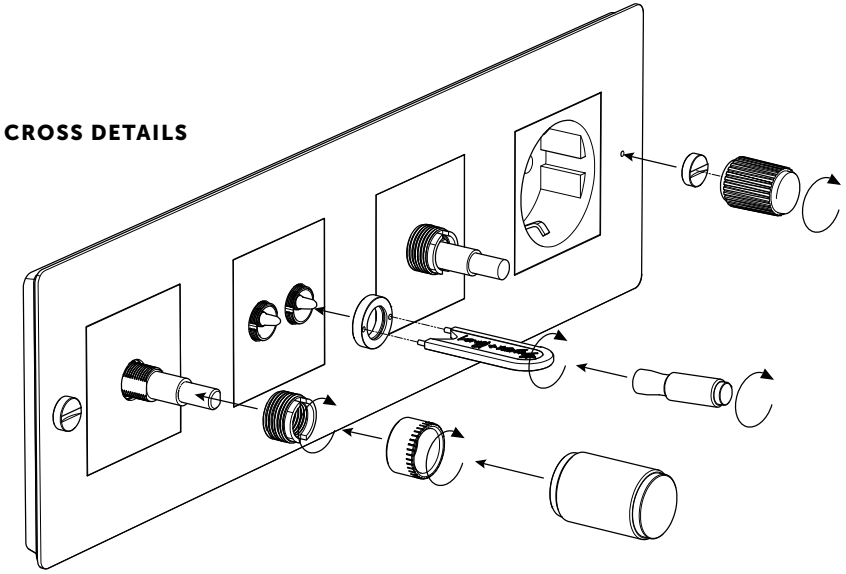

LINEAR DETAILS

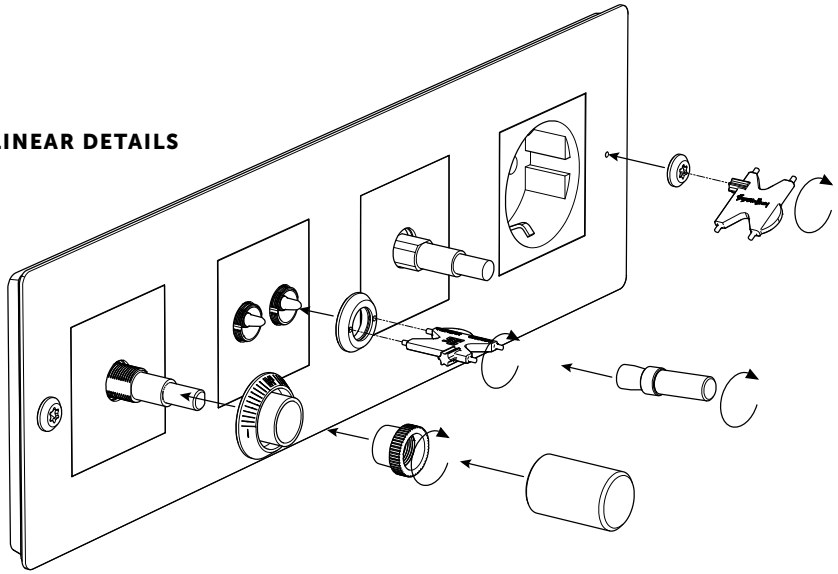

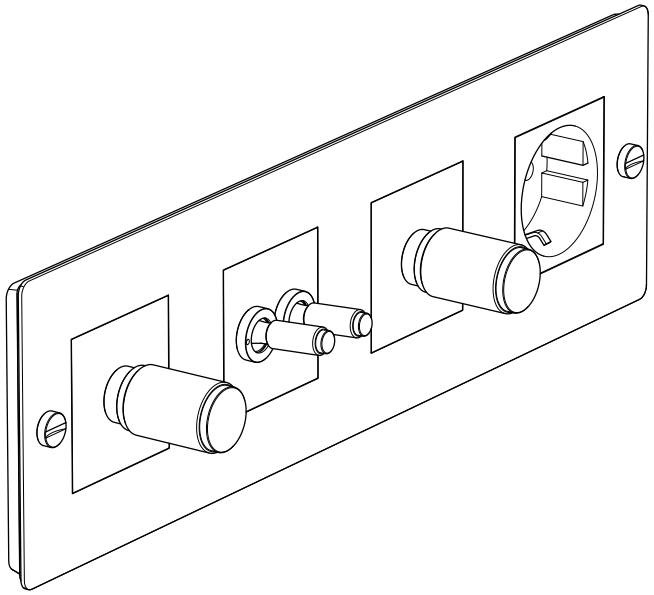

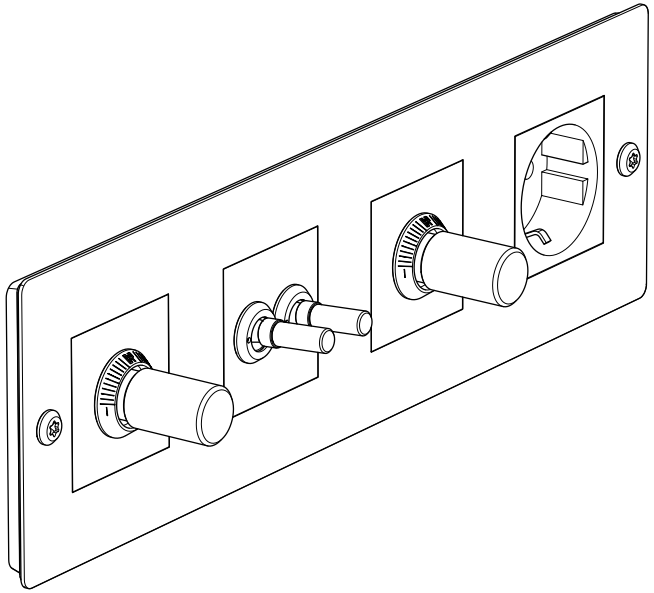

[end. **ORDINARY.**]